WESTERN®

2008

MODEL YEAR VEHICLES

SELECTION LIST

Isolation Module System Snowplows

suburbanite™

UltraMount® SYSTEM

UniMount® SYSTEM

Heavy Weight Snowplows Only

Lit. No. 64785
Revision 01
November 1, 2008

This document supersedes all editions with an earlier date.

TABLE OF CONTENTS

About the *Selection List* 3
Selection Example 4
Chevy/GMC Attachment Kits 5
Dodge Attachment Kits 9
Ford Attachment Kits 13
International Attachment Kits 22
Jeep Attachment Kits 23
Mitsubishi Attachment Kits 24
Nissan Attachment Kits 26
Toyota Attachment Kits 27
Headlamp Type Identification Guide 29
4-Port to 3-Port Conversion Chart 30
Weight and Dimensional Charts 31
Dimensional Diagram 32
Ballast Inquiry Sheet 33
UltraMount® System to UniMount® System Conversion Kit 34

ABBREVIATION KEY					
---	No Application	GVWR	Gross Vehicle Weight Rating	SU-2DR	Two Door Sport/Utility Vehicle
4WS	Four Wheel Steering	HD	Heavy Duty	SU-4DR	Four Door Sport/Utility Vehicle
4x2	Two Wheel Drive	HO	High Output	SUB	Suburbanite™ Snowplow
4x4	Four Wheel Drive	HYD	Hydraulic	UHW	UniMount Heavy Weight Snowplow
A,Q&L	A-Frame, Quadrant & Lift Frame	MIN	Minimum	UTM	UltraMount MIDWEIGHT™ Snowplow
AWD	All Wheel Drive	MVP	MultiPosition V-Plow	UTMY	UltraMount MIDWEIGHT Poly Snowplow
CG	Center of Gravity	MVPP	MVP PLUS™ Snowplow	UTMVP	UltraMount MVP® Snowplow
Chassis	Chassis Cab or Cab Chassis	n/s	Not Specified	UTMVPP	UltraMount MVP PLUS Snowplow
DIA	Diameter	Non-DRLs	Vehicles without Daytime Running Lights	UTMVPPY	UltraMount Poly MVP PLUS Snowplow
DRLs	Daytime Running Lights (vehicles with)	NTEA	National Truck Equipment Association	UTP	UltraMount PRO-PLOW® Snowplow
DRW	Dual Rear Wheels	OEM	Original Equipment Manufacturer	UTPP	UltraMount PRO PLUS® Snowplow
Ext Cab	Extended Cab Vehicle	OHC	Overhead Cam	UTPY	UltraMount POLY PRO-PLOW Snowplow
FFV	Flex Fuel Vehicle	PN	Part Number	UTWO	UltraMount WIDE-OUT™ Snowplow
FGAWR	Front Gross Axle Weight Rating	RGAWR	Rear Gross Axle Weight Rating	w/	With
FMVSS	Federal Motor Vehicle Safety Standards	SL	Selection List	w/o	Without

⚠ WARNING

New untitled vehicle installation of a snowplow requires National Highway Traffic Safety Administration altered vehicle certification labeling. Installer to verify that selected snowplow and ballast, if required, do not exceed GVWR or GAWR rating label and complies with FMVSS.

⚠ WARNING

Do not exceed GVWR or GAWR, including blade and ballast. The rating label is found on the driver-side vehicle door cornerpost.

ABOUT THE *SELECTION LIST*

The *Selection List* (*SL*) is designed to help you determine the appropriate snowplow components for a particular snowplow vehicle application. The information published in this guide is based on Federal Motor Vehicle Safety Standards (FMVSS) and a "representative" snowplow vehicle as defined in this guide. The vehicle includes a combined weight of 300 lb for occupants in the front seat location.

This *SL* is for specific model year vehicles only and is listed on the front cover of this guide. This guide should be saved for future reference. New selection guides will be published for the upcoming model year and so on. The instructions on page 4 explain how to use the *Selection List.*

The "Representative Vehicle"

Knowing that today's snowplow vehicles come in a variety of sizes and configurations (such as wheel base, engine size, and handling packages), Western Products has defined a "representative vehicle" that contains the options most likely to appear on a typical snowplow application. The "representative vehicle" includes the following options:

- 4X4 Drivetrain (unless noted)
- Spare Tire & Wheel
- Automatic Transmission
- Rear Bumper
- Air Conditioning
- Full Fluids

NOTE: If the vehicle in question does not match a vehicle listing in the *Selection List,* or has options that differ from the "Representative Vehicle" as defined earlier, the ballast inquiry sheet must be filled out and submitted in order to determine snowplow availability and correct ballast amounts to maintain FMVSS compliance. Completed vehicle at no time shall exceed GVWR or GAWR.

Snowplow Product

Snowplows are considered motor vehicle equipment. The installer is ultimately responsible for determining and correctly labeling the vehicle with the addition of snowplow selection. No product selected and installed shall render inoperative the vehicle's safety compliance.

Product Changes

All information is as accurate as we can determine but is subject to revision with additional or more complete information. Western Products reserves the right under its product improvement policy to change construction or design details and furnish equipment when so altered without reference to illustrations or specifications used. Western Products or the vehicle manufacturer may require or recommend optional equipment for snow removal.

Ballast

When ballast is required it must be secured behind the rear wheels in a manner which prevents it from sliding during normal driving. Ballast shall not exceed 1000 lb.

Western Products offers an optional ballast retainer kit (62849) for this purpose.

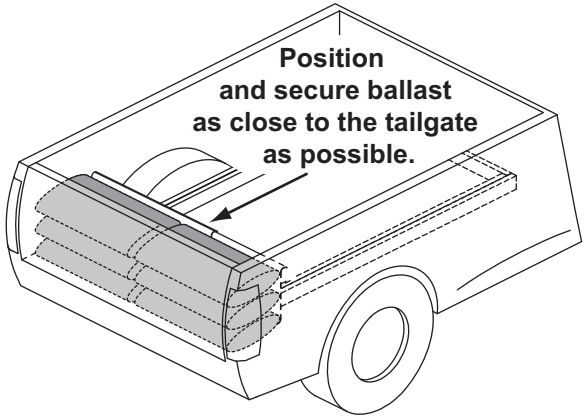

NOTE: Ballast recommended and its weight calculations assume the entire width of the bed is filled as close to the tailgate as possible.

HOW TO USE THE *SELECTION LIST*

Selection Example:

Acme Motors 15000 VX with UltraMount® System

1. Go to the section for the appropriate manufacturer.
2. Go to the subsection for the desired snowplow:
   - **Section 1:** Suburbanite™ & MIDWEIGHT™ Blades
   - **Section 2:** PRO-PLOW®, PRO PLUS® & Heavy Weight Blades
   - **Section 3:** MVP PLUS™ & WIDE-OUT™ Blades
3. Starting at the left-most column, find the **model** and appropriate configuration for the vehicle. In this case, 4X4, Regular Cab, 6.5 ft. box, 5.3L V8 engine, 3925 Min. FGAWR.
4. Locate the **harness kit** part number for this vehicle: 27780. See Headlamp Reference Guide in the back of the Selection List for more information.
5. Locate the **mount** for this vehicle: 1523 for Suburbanite system or 67960-1 for UltraMount system. Refer to any footnotes concerning conditions or requirements. For this example the UltraMount system is selected and has five footnotes: 1, 2, 3, 4 and 6.
6. Locate the acceptable blades at the top of the table. Only those blades with ballast weights listed are valid applications. Three short dashes (---) indicates an invalid application. A question mark (?) indicates a ballast inquiry sheet must be completed.
7. For this example, there are two acceptable UltraMount blades. Choose the 7'-6" Steel MIDWEIGHT blade. This blade requires 350 lb of ballast.
8. To order components for a complete snowplow package, read down from the top of the selected blade column for appropriate part numbers. Be sure to select *one* Isolation Module, either DRL or Non-DRL, *one* control, either joystick or hand-held. For this example, the part numbers would be:
   - 64340 (blade assembly)
   - 64336 (A, Q & L assembly Box 1)
   - 67992 (A, Q & L assembly Box 2)
   - 64620 (hydraulic kit)
   - 28800 (light kit)
   - 29070 *or* 29060 (module)
   - 56369 *or* 56462 (control)
   - 27780 (harness kit, from Step 4)
   - 67960-1 (mount, from Step 5 – *must match blade*)

2008 Acme Motors (1)

Section 1 (2)

Suburbanite™ & MIDWEIGHT™ blades

	Suburbanite™		MIDWEIGHT™	
	6'-8" POLY	7'-4" POLY	7'-6" STEEL	7'-6" POLY
Plow	SUB68	SUB74	IUTM75	IUTMY75
Blade Assembly	27546	27548	64340	64330
AQ&L Assembly Box 1	27550		64336	
AQ&L Assembly Box 2	n/a		67992	
Hydraulic Kit	27516		64620	
Light Kit	64100		28800	
Choose a Module	DRLs: 29070, Non-DRLs: 29060		DRLs: 29070, Non-DRLs: 29060	
Choose a Joystick Control or Hand-Held Control	56369		56369	
	56462		56462	

(8) (6)

Model		Body Style	DRW	Box Option	Engine Type	Min FGAWR	Min RGAWR	Min GVWR	Harness Kit	Personal Plow system: Mount Kit	Personal Plow system: Notes	Ballast Guidelines, lbs (1)		UltraMount® system: Mount Kit	UltraMount® system: Notes	Ballast Guidelines, lbs (1)	
15000 RS	4x4	Reg Cab	No	6.5 Box	4.3L V6	3925	3750	6400	HB3/HB4 use 27780	1523	3,6,8	---	100	67960-1	2,3,4,6	350	300
15000 TU	4x4	Reg Cab	No	6.5 Box	4.8L V8	3925	3750	6400		1523	3,6,8	---	150	67960-1	2,3,4,6	400	400
15000 VX	4x4	Reg Cab	No	6.5 Box	5.3L V8	3925	3750	6400		1523	3,6,8	---	100	67960-1	2,3,4,6	350	350

(3) (4) (5) (7)

Notes:

1. Ballast amounts are based on a "Representative Vehicle," defined in the vehicle selection guide instructions, and must be modified for all other configurations for axle and GVWR compliance.
2. Recommended snowplow prep package whenever available.
3. Requires bumper notching.
4. Recommended Z85 suspension.
6. All New Style Only (2nd # in model # is 5 not 0) example: K15903. Refer to label in glove box for model number.
8. These Snowplows Are For Personal/Homeowner Use Only.

2008 Chevy/GMC

Section 1
Suburbanite™ & MIDWEIGHT™ Blades

	Suburbanite™		MIDWEIGHT™	
	6'-8" POLY	7'-4" POLY	7'-6" STEEL	7'-6" POLY
Plow	SUB68	SUB74	IUTM75	IUTMY75
Blade Assembly	27546	27548	64340	64330
AQ&L Assembly Box 1	27550		64336	
AQ&L Assembly Box 2	n/a		67992	
Hydraulic Kit	27516		64620	
Light Kit	64100		28800	
Choose a Module	DRLs: 29070, Non-DRLs: 29060		DRLs: 29070, Non-DRLs: 29060	
Choose a Joystick Control	56369		56369	
or Hand-Held Control	56462		56462	

Model		Body Style	DRW	Box Option	Engine Type	Min FGAWR	Min RGAWR	Min GVWR	Harness Kit	Personal Plow System		Ballast Guidelines, lbs (1)		UltraMount® System		Ballast Guidelines, lbs (1)	
										Mount Kit	Notes			Mount Kit	Notes		
TRAILBLAZER/ENVOY	4x4	SU-4DR	No	---	4.2L I6	2950	3200	5750	HB3/HB4 use 29052	1533-1	8	70	160	n/a	---	---	---
TAHOE/YUKON 1500	4x4	SU-4DR	No	---	5.3L V8	3600	4100	7300	HB3/H11 use 29400-2 or H13 use 29049	31553	3,8	---	0	31599	3	---	---
SUBURBAN/YUKON XL 2500	4x4	SU-4DR	No	---	6.0L V8	4180	5500	8600		n/a	---	---	---	67981-2	48	0	0
COLORADO/CANYON	4x4	Reg Cab	No	6.1 Box	2.9L I4	2753	2896	5150	HB3/HB4 US use 29048 or HB3/HB4 Canada use 29048	31543-1	3,8	20	40	n/a	---	---	---
COLORADO/CANYON	4x4	Reg Cab	No	6.1 Box	3.7L I5	2753	2896	5150		31543-1	3,8	30	50	n/a	---	---	---
COLORADO/CANYON	4x4	Ext Cab	No	6.1 Box	2.9L I4	2753	2896	5300		31543-1	3,8	30	40	n/a	---	---	---
COLORADO/CANYON	4x4	Ext Cab	No	6.1 Box	3.7L I5	2753	2896	5300		31543-1	3,8	90	180	n/a	---	---	---
COLORADO/CANYON	4x4	Crew Cab	No	5.0 Box	3.7L I5	2753	2896	5300		31543-1	3,8	30	110	n/a	---	---	---
K1500 SILV/SIERRA	4x4	Reg Cab	No	6.5 Box	4.3L V6	3950	3750	6400	HB3/H11 use 29400-2	31553	3,8	---	50	31599	3	340	340
K1500 SILV/SIERRA	4x4	Reg Cab	No	6.5 Box	4.8L V8	3950	3750	6400		31553	3,8	---	90	31599	3	430	390
K1500 SILV/SIERRA	4x4	Reg Cab	No	6.5 Box	5.3L V8	3950	3750	6400		31553	3,8	---	100	31599	3	---	---
K1500 SILV/SIERRA	4x4	Reg Cab	No	8.0 Box	4.3L V6	3950	3950	6800		31553	3,8	---	60	31599	3	360	320
K1500 SILV/SIERRA	4x4	Reg Cab	No	8.0 Box	4.3L V6	3950	3750	6400		31553	3,8	---	60	31599	3	360	320
K1500 SILV/SIERRA	4x4	Reg Cab	No	8.0 Box	4.8L V8	3950	3950	6800		31553	3,8	---	100	31599	3	---	---
K1500 SILV/SIERRA	4x4	Reg Cab	No	8.0 Box	4.8L V8	3950	3750	6400		31553	3,8	---	100	31599	3	---	---
K1500 SILV/SIERRA	4x4	Reg Cab	No	8.0 Box	5.3L V8	3950	3950	6800		31553	3,8	---	100	31599	3	---	---
K1500 SILV/SIERRA	4x4	Reg Cab	No	8.0 Box	5.3L V8	3950	3750	6400		31553	3,8	---	100	31599	3	---	---
K1500 SILV/SIERRA	4x4	Ext Cab	No	5.8 Box	4.8L V8	3950	3950	6800		31553	3,8	---	0	31599	3	---	---
K1500 SILV/SIERRA	4x4	Ext Cab	No	5.8 Box	5.3L V8	3950	3950	6800		31553	3,8	---	0	31599	3	---	---
K1500 SILV/SIERRA	4x4	Ext Cab	No	5.8 Box	6.0L V8	3950	3950	6800		31553	3,8	---	0	31599	3	---	---
K1500 SILV/SIERRA	4x4	Ext Cab	No	6.5 Box	4.8L V8	3950	4200	7200		31553	3,8	---	50	31599	3	---	---
K1500 SILV/SIERRA	4x4	Ext Cab	No	6.5 Box	4.8L V8	3950	3950	7000		31553	3,8	---	50	31599	3	---	---
K1500 SILV/SIERRA	4x4	Ext Cab	No	6.5 Box	5.3L V8	3950	4200	7200		31553	3,8	---	50	31599	3	---	---
K1500 SILV/SIERRA	4x4	Ext Cab	No	6.5 Box	5.3L V8	3950	3950	7000		31553	3,8	---	50	31599	3	---	---
K1500 SILV/SIERRA	4x4	Ext Cab	No	6.5 Box	6.0L V8	3950	4200	7200		31553	3,8	---	10	31599	3	---	---
K1500 SILV/SIERRA	4x4	Ext Cab	No	6.5 Box	6.0L V8	3950	3950	7000		31553	3,8	---	10	31599	3	---	---

Notes:

1. Ballast amounts are based on a "Representative Vehicle," defined in the vehicle selection guide instructions, and must be modified for all other configurations for axle and GVWR compliance.
3. Requires bumper notching.
8. These Snowplows Are For Personal/Homeowner Use Only.
48. Snowplow prep package required until further notice.

2008 Chevy/GMC

Section 1
Suburbanite™ & MIDWEIGHT™ Blades

	Suburbanite™		MIDWEIGHT™	
	6'-8" POLY	7'-4" POLY	7'-6" STEEL	7'-6" POLY
Plow	SUB68	SUB74	IUTM75	IUTMY75
Blade Assembly	27546	27548	64340	64330
AQ&L Assembly Box 1	27550		64336	
AQ&L Assembly Box 2	n/a		67992	
Hydraulic Kit	27516		64620	
Light Kit	64100		28800	
Choose a Module	DRLs: 29070, Non-DRLs: 29060		DRLs: 29070, Non-DRLs: 29060	
Choose a Joystick Control	56369		56369	
or Hand-Held Control	56462		56462	

Model		Body Style	DRW	Box Option	Engine Type	Min FGAWR	Min RGAWR	Min GVWR	Harness Kit	Personal Plow System		Ballast Guidelines, lbs (1)		UltraMount® System		Ballast Guidelines, lbs (1)	
										Mount Kit	Notes			Mount Kit	Notes		
K1500 SILV/SIERRA	4x4	Ext Cab	No	8.0 Box	5.3L V8	3950	3950	7000	HB3/H11 use 29400-2	31553	3,8	---	40	31599	3	---	---
K1500 SILV/SIERRA	4x4	Crew Cab	No	5.8 Box	4.8L V8	3950	4200	7300		31553	3,8	---	0	31599	3	---	---
K1500 SILV/SIERRA	4x4	Crew Cab	No	5.8 Box	4.8L V8	3950	3950	7000		31553	3,8	---	0	31599	3	---	---
K1500 SILV/SIERRA	4x4	Crew Cab	No	5.8 Box	5.3L V8	3950	4200	7300		31553	3,8	---	0	31599	3	---	960
K1500 SILV/SIERRA	4x4	Crew Cab	No	5.8 Box	5.3L V8	3950	3950	7000		31553	3,8	---	0	31599	3	---	---
K1500 SILV/SIERRA	4x4	Crew Cab	No	5.8 Box	6.0L V8	3950	4200	7300		31553	3,8	---	0	31599	3	---	980
K1500 SILV/SIERRA	4x4	Crew Cab	No	5.8 Box	6.0L V8	3950	3950	7000		31553	3,8	---	0	31599	3	---	---
K2500HD SILV/SIERRA	4x4	Reg Cab	No	8.0 Box	6.0L V8	4800	6084	9200		n/a	---	---	---	67981-2	3,48	180	170
K2500HD SILV/SIERRA	4x4	Reg Cab	No	8.0 Box	6.6L D	4860	6084	9200		n/a	---	---	---	67981-2	3,48	390	380
K2500HD SILV/SIERRA	4x4	Reg Cab	No	8.0 Box	6.6L D	4800	6084	9200		n/a	---	---	---	67981-2	3,48	430	390
K2500HD SILV/SIERRA	4x4	Ext Cab	No	6.5 Box	6.0L V8	4800	6084	9200		n/a	---	---	---	67981-2	3,48	190	180
K2500HD SILV/SIERRA	4x4	Ext Cab	No	6.5 Box	6.6L D	4860	6084	9200		n/a	---	---	---	67981-2	3,48	960	910
K2500HD SILV/SIERRA	4x4	Ext Cab	No	8.0 Box	6.0L V8	4800	6084	9200		n/a	---	---	---	67981-2	3,48	120	120
K2500HD SILV/SIERRA	4x4	Crew Cab	No	6.5 Box	6.0L V8	4800	6084	9200		n/a	---	---	---	67981-2	3,48	70	70
K2500HD SILV/SIERRA	4x4	Crew Cab	No	6.5 Box	6.6L D	4860	6084	9200		n/a	---	---	---	67981-2	3,48	920	870
K2500HD SILV/SIERRA	4x4	Crew Cab	No	8.0 Box	6.0L V8	4800	6084	9200		n/a	---	---	---	67981-2	3,48	40	30

Notes:

1. Ballast amounts are based on a "Representative Vehicle," defined in the vehicle selection guide instructions, and must be modified for all other configurations for axle and GVWR compliance.
3. Requires bumper notching.
8. These Snowplows Are For Personal/Homeowner Use Only.
48. Snowplow prep package required until further notice.

2008 Chevy/GMC

Section 2

PRO-PLOW®, PRO PLUS® & Heavy Weight Blades

	UltraMount									UniMount
	PRO-PLOW®					PRO PLUS®				Heavy Weight
	7'-6" STEEL	7'-6" POLY	8' STEEL	8' POLY	8'-6" STEEL	7'-6" STEEL	8' STEEL	8'-6" STEEL	9' STEEL	9' STEEL / 10' STEEL
Plow	IUTP75	IUTPY75	IUTP80	IUTPY80	IUTP85	IUTPP75	IUTPP80	IUTPP85	IUTPP90	IUHW90 / IUHW10
Blade Assembly	60381	62400	60390	62450	60308	64750	66980	66974	66901	62301 / 62302
AQ&L Assembly Box 1	67950					66490				62298-1
AQ&L Assembly Box 2	67951-2									62299-1
Hydraulic Kit	64588					64999				64400
Light Kit	28800									28800 & 28340
Choose a Module	DRLs: 29070, Non-DRLs: 29060									DRLs: 29070, Non-DRLs: 29060
Choose a Joystick Control	56369									56369
or Hand-Held Control	56462									56462

Model		Body Style	DRW	Box Option	Engine Type	Min FGAWR	Min RGAWR	Min GVWR	Harness Kit	UltraMount® System Mount Kit	UltraMount® System Notes	Ballast Guidelines, lbs (1)									UniMount® System Mount Kit	UniMount® System Notes	Ballast Guidelines, lbs (1)	
K2500HD SILV/SIERRA	4x4	Reg Cab	No	8.0 Box	6.0L V8	4800	6084	9200	HB3/H11 use 29400-2	67981-2	3,48	290	340	310	340	330	410	430	450	460	n/a	---	---	---
K2500HD SILV/SIERRA	4x4	Reg Cab	No	8.0 Box	6.6L D	4860	6084	9200		67981-2	3,48	960	---	---	---	---	---	---	---	---	n/a	---	---	---
K2500HD SILV/SIERRA	4x4	Ext Cab	No	6.5 Box	6.0L V8	4800	6084	9200		67981-2	3,48	310	350	320	350	340	430	440	460	470	n/a	---	---	---
K2500HD SILV/SIERRA	4x4	Ext Cab	No	8.0 Box	6.0L V8	4800	6084	9200		67981-2	3,48	240	270	250	280	270	350	370	380	390	n/a	---	---	---
K2500HD SILV/SIERRA	4x4	Crew Cab	No	6.5 Box	6.0L V8	4800	6084	9200		67981-2	3,48	190	230	210	240	220	310	330	340	360	n/a	---	---	---
K2500HD SILV/SIERRA	4x4	Crew Cab	No	8.0 Box	6.0L V8	4800	6084	9200		67981-2	3,48	150	190	170	190	180	260	280	320	410	n/a	---	---	---
K3500 SILV/SIERRA	4x4	Reg Cab	No	8.0 Box	6.0L V8	4800	6390	9900		67981-2	3,48	170	210	180	210	200	280	300	310	330	n/a	---	---	---
K3500 SILV/SIERRA	4x4	Reg Cab	No	8.0 Box	6.6L D	4800	6390	9900		67981-2	3,48	1000	---	---	---	---	---	---	---	---	n/a	---	---	---
K3500 SILV/SIERRA	4x4	Reg Cab	No	Chassis	n/a	n/a	n/a	8501		67981-2	3,48	?	?	?	?	?	?	?	?	?	n/a	---	---	---
K3500 SILV/SIERRA	4x4	Reg Cab	Yes	8.0 Box	6.0L V8	4800	8200	11400		67981-2	3,48	---	---	---	---	120	---	---	240	260	n/a	---	---	---
K3500 SILV/SIERRA	4x4	Reg Cab	Yes	Chassis	n/a	n/a	n/a	8501		67981-2	3,48	---	---	---	---	?	---	---	?	?	n/a	---	---	---
K3500 SILV/SIERRA	4x4	Ext Cab	No	8.0 Box	6.0L V8	4800	6390	9900		67981-2	3,48	70	100	80	110	100	180	190	210	220	n/a	---	---	---
K3500 SILV/SIERRA	4x4	Ext Cab	No	Chassis	n/a	n/a	n/a	8501		67981-2	3,48	?	?	?	?	?	?	?	?	?	n/a	---	---	---
K3500 SILV/SIERRA	4x4	Ext Cab	Yes	8.0 Box	6.0L V8	4800	8200	11400		67981-2	3,48	---	---	---	---	10	---	---	130	220	n/a	---	---	---
K3500 SILV/SIERRA	4x4	Ext Cab	Yes	Chassis	n/a	n/a	n/a	8501		67981-2	3,48	---	---	---	---	?	---	---	?	?	n/a	---	---	---
K3500 SILV/SIERRA	4x4	Crew Cab	No	8.0 Box	6.0L V8	4800	6390	9900		67981-2	3,48	60	100	70	100	90	170	240	330	420	n/a	---	---	---
K3500 SILV/SIERRA	4x4	Crew Cab	No	Chassis	n/a	n/a	n/a	8501		67981-2	3,48	?	?	?	?	?	?	?	?	?	n/a	---	---	---
K3500 SILV/SIERRA	4x4	Crew Cab	Yes	8.0 Box	6.0L V8	4800	8200	11400		67981-2	3,48	---	---	---	---	0	---	---	480	570	n/a	---	---	---
K3500 SILV/SIERRA	4x4	Crew Cab	Yes	Chassis	n/a	n/a	n/a	8501		67981-2	3,48	---	---	---	---	?	---	---	?	?	n/a	---	---	---
C3500 SILV/SIERRA	4x4	Reg Cab	No	8.0 Box	6.0L V8	4200	6390	9900		67981-2	48	940	---	---	---	---	---	---	---	---	n/a	---	---	---
C3500 SILV/SIERRA	4x2	Reg Cab	Yes	Chassis	n/a	n/a	n/a	10001	HB3/HB4 use 29048	67981-2	---	---	---	---	---	?	---	---	?	?	n/a	---	---	---
C3500 SILV/SIERRA	4x2	Ext Cab	Yes	Chassis	n/a	n/a	n/a	10001		67981-2	---	---	---	---	---	?	---	---	?	?	n/a	---	---	---
C3500 SILV/SIERRA	4x2	Crew Cab	Yes	Chassis	n/a	n/a	n/a	10001		67981-2	---	---	---	---	---	?	---	---	?	?	n/a	---	---	---
C4500	4x4	n/a	Yes	Chassis	n/a	n/a	n/a	10001	2B use 29053 or 1A/2A use 29053	33559	2	---	---	---	---	---	---	---	?	?	62275	---	?	?
C4500	4x2	n/a	Yes	Chassis	n/a	n/a	n/a	10001		64110	2	---	---	---	---	---	---	---	?	?	62275	---	?	?
C5500	4x4	n/a	Yes	Chassis	n/a	n/a	n/a	10001		33559	2	---	---	---	---	---	---	---	?	?	62275	---	?	?
C5500	4x2	n/a	Yes	Chassis	n/a	n/a	n/a	10001		64110	2	---	---	---	---	---	---	---	?	?	62275	---	?	?

Notes:

1. Ballast amounts are based on a "Representative Vehicle," defined in the vehicle selection guide instructions, and must be modified for all other configurations for axle and GVWR compliance.
2. Recommended snowplow prep package whenever available.
3. Requires bumper notching.
48. Snowplow prep package required until further notice.

2008 Chevy/GMC

Section 3
MVP PLUS™ & WIDE-OUT™ Blades

	UltraMount®						
	MVP PLUS™						WIDE-OUT™
	7'-6" STEEL	7'-6" POLY	8'-6" STEEL	8'-6" POLY	9'-6" STEEL	9'-6" POLY	8'–10' STEEL
Plow	IUTMVPP75	IUTMVPPY75	IUTMVPP85	IUTMVPPY85	IUTMVPP95	IUTMVPPY95	IUTWO810
Blade Assembly	44475-1	44575-1	44485-1	44585-1	44495-1	44595-1	51810
AQ&L Assembly Box 1	44225-1						51225
AQ&L Assembly Box 2	n/a						
Hydraulic Kit	n/a						
Light Kit	n/a						
Choose a Module	DRLs: 29070, Non-DRLs: 29060						
Choose a Joystick Control	96400						n/a
or Hand-Held Control	96500						

Model		Body Style	DRW	Box Option	Engine Type	Min FGAWR	Min RGAWR	Min GVWR	Harness Kit	UltraMount® System		Ballast Guidelines, lbs (1)						
										Mount Kit	Notes							
K2500HD SILV/SIERRA	4x4	Reg Cab	No	8.0 Box	6.0L V8	4800	6084	9200	HB3/H11 use 29400-2	67981-2	3,48	400	370	440	410	530	490	560
K2500HD SILV/SIERRA	4x4	Ext Cab	No	6.5 Box	6.0L V8	4800	6084	9200		67981-2	3,48	410	390	450	430	910	590	880
K2500HD SILV/SIERRA	4x4	Ext Cab	No	8.0 Box	6.0L V8	4800	6084	9200		67981-2	3,48	340	310	380	350	1000	770	960
K2500HD SILV/SIERRA	4x4	Crew Cab	No	6.5 Box	6.0L V8	4800	6084	9200		67981-2	3,48	300	270	340	310	860	540	820
K2500HD SILV/SIERRA	4x4	Crew Cab	No	8.0 Box	6.0L V8	4800	6084	9200		67981-2	3,48	250	230	460	290	---	900	---
K3500 SILV/SIERRA	4x4	Reg Cab	No	8.0 Box	6.0L V8	4800	6390	9900		67981-2	3,48	270	240	310	280	400	360	420
K3500 SILV/SIERRA	4x4	Reg Cab	No	Chassis	n/a	n/a	n/a	8501		67981-2	3,48	?	?	?	?	?	?	?
K3500 SILV/SIERRA	4x4	Reg Cab	Yes	8.0 Box	6.0L V8	4800	8200	11400		67981-2	3,48	---	---	230	210	410	290	400
K3500 SILV/SIERRA	4x4	Reg Cab	Yes	Chassis	n/a	n/a	n/a	8501		67981-2	3,48	---	---	?	?	?	?	?
K3500 SILV/SIERRA	4x4	Ext Cab	No	8.0 Box	6.0L V8	4800	6390	9900		67981-2	3,48	170	140	210	180	740	460	630
K3500 SILV/SIERRA	4x4	Ext Cab	No	Chassis	n/a	n/a	n/a	8501		67981-2	3,48	?	?	?	?	?	?	?
K3500 SILV/SIERRA	4x4	Ext Cab	Yes	8.0 Box	6.0L V8	4800	8200	11400		67981-2	3,48	---	---	260	100	890	600	850
K3500 SILV/SIERRA	4x4	Ext Cab	Yes	Chassis	n/a	n/a	n/a	8501		67981-2	3,48	---	---	?	?	?	?	?
K3500 SILV/SIERRA	4x4	Crew Cab	No	8.0 Box	6.0L V8	4800	6390	9900		67981-2	3,48	200	140	470	300	---	910	---
K3500 SILV/SIERRA	4x4	Crew Cab	No	Chassis	n/a	n/a	n/a	8501		67981-2	3,48	?	?	?	?	?	?	?
K3500 SILV/SIERRA	4x4	Crew Cab	Yes	8.0 Box	6.0L V8	4800	8200	11400		67981-2	3,48	---	---	620	450	---	---	---
K3500 SILV/SIERRA	4x4	Crew Cab	Yes	Chassis	n/a	n/a	n/a	8501		67981-2	3,48	---	---	?	?	?	?	?
C3500 SILV/SIERRA	4x2	Reg Cab	Yes	Chassis	n/a	n/a	n/a	10001	HB3/HB4 use 29048	67981-2	---	---	---	?	?	?	?	?
C3500 SILV/SIERRA	4x2	Ext Cab	Yes	Chassis	n/a	n/a	n/a	10001		67981-2	---	---	---	?	?	?	?	?
C3500 SILV/SIERRA	4x2	Crew Cab	Yes	Chassis	n/a	n/a	n/a	10001		67981-2	---	---	---	?	?	?	?	?
C4500	4x4	n/a	Yes	Chassis	n/a	n/a	n/a	10001	2B use 29053 or 1A/2A use 29053	33559	2	---	---	?	?	?	?	?
C4500	4x2	n/a	Yes	Chassis	n/a	n/a	n/a	10001		64110	2	---	---	?	?	?	?	?
C5500	4x4	n/a	Yes	Chassis	n/a	n/a	n/a	10001		33559	2	---	---	?	?	?	?	?
C5500	4x2	n/a	Yes	Chassis	n/a	n/a	n/a	10001		64110	2	---	---	?	?	?	?	?

Notes:

1. Ballast amounts are based on a "Representative Vehicle," defined in the vehicle selection guide instructions, and must be modified for all other configurations for axle and GVWR compliance.
2. Recommended snowplow prep package whenever available.
3. Requires bumper notching.
48. Snowplow prep package required until further notice.

2008 Dodge

Section 1
Suburbanite™ & MIDWEIGHT™ Blades

	Suburbanite™		MIDWEIGHT™	
	6'-8" POLY	7'-4" POLY	7'-6" STEEL	7'-6" POLY
Plow	SUB68	SUB74	IUTM75	IUTMY75
Blade Assembly	27546	27548	64340	64330
AQ&L Assembly Box 1	27550		64336	
AQ&L Assembly Box 2	n/a		67992	
Hydraulic Kit	27516		64620	
Light Kit	64100		28800	
Choose a Module	DRLs: 29070, Non-DRLs: 29060		DRLs: 29070, Non-DRLs: 29060	
Choose a Joystick Control	56369		56369	
or Hand-Held Control	56462		56462	

Model		Body Style	DRW	Box Option	Engine Type	Min FGAWR	Min RGAWR	Min GVWR	Harness Kit	Personal Plow System				UltraMount® System			
										Mount Kit	Notes	Ballast Guidelines, lbs (1)		Mount Kit	Notes	Ballast Guidelines, lbs (1)	
DURANGO ST	4x4	SU-4DR	No	---	4.7L FFV	3600	3900	6700	H13 use 29049	33903	8	---	0	n/a	---	---	---
DURANGO ST	4x4	SU-4DR	No	---	4.7L V8	3600	3900	6700		33903	8	---	0	n/a	---	---	---
DURANGO SLT	4x4	SU-4DR	No	---	4.7L FFV	3600	3900	6700		33903	8	---	0	n/a	---	---	---
DURANGO SLT	4x4	SU-4DR	No	---	4.7L V8	3600	3900	6700		33903	8	---	0	n/a	---	---	---
DURANGO SLT	4x4	SU-4DR	No	---	5.8L V8	3600	3900	6750		33903	8	---	0	n/a	---	---	---
DURANGO LIMITED	4x4	SU-4DR	No	---	4.7L FFV	3600	3900	6700		33903	8	---	0	n/a	---	---	---
DURANGO LIMITED	4x4	SU-4DR	No	---	4.7L V8	3600	3900	6700		33903	8	---	0	n/a	---	---	---
DURANGO LIMITED	4x4	SU-4DR	No	---	5.7L V8	3600	3900	6750		33903	8	---	0	n/a	---	---	---
DAKOTA ST	4x4	Club Cab	No	6.5 Box	3.7L V6	3600	3600	6010		33903	8	---	30	33929	3	270	260
DAKOTA ST	4x4	Club Cab	No	6.5 Box	4.7L V8	3600	3600	6010		33903	8	---	0	33929	3	410	370
DAKOTA ST	4x4	Club Cab	No	6.5 Box	4.7L V8 FFV	3600	3600	6010		33903	8	---	0	33929	3	410	370
DAKOTA ST	4x4	Quad Cab	No	5.5 Box	3.7L V6	3600	3600	6010		33903	8	---	0	33929	3	190	190
DAKOTA ST	4x4	Quad Cab	No	5.5 Box	4.7L V8	3600	3600	6010		33903	8	---	0	33929	3	---	340
DAKOTA SLT	4x4	Club Cab	No	6.5 Box	3.7L V6	3600	3600	6010		33903	8	---	30	33929	3	270	260
DAKOTA SLT	4x4	Club Cab	No	6.5 Box	4.7L V8	3600	3600	6010		33903	8	---	0	33929	3	430	390
DAKOTA SLT	4x4	Club Cab	No	6.5 Box	4.7L V8 FFV	3600	3600	6010		33903	8	---	0	33929	3	430	390
DAKOTA SLT	4x4	Club Cab	No	6.5 Box	4.7L V8 HO	3600	3600	6010		33903	8	---	0	33929	3	430	390
DAKOTA SLT	4x4	Quad Cab	No	5.5 Box	3.7L V6	3600	3600	6010		33903	8	---	0	33929	3	200	200
DAKOTA SLT	4x4	Quad Cab	No	5.5 Box	4.7L V8	3600	3600	6010		33903	8	---	0	33929	3	360	320
DAKOTA SLT	4x4	Quad Cab	No	5.5 Box	4.7L V8 FFV	3600	3600	6010		33903	8	---	0	33929	3	360	320
DAKOTA SLT	4x4	Quad Cab	No	5.5 Box	4.7L V8 HO	3600	3600	6010		33903	8	---	0	33929	3	360	320
DAKOTA LARAMIE	4x4	Club Cab	No	6.5 Box	3.7L V6	3600	3600	6010		33903	8	---	70	33929	3	390	350
DAKOTA LARAMIE	4x4	Club Cab	No	6.5 Box	4.7L V8	3600	3600	6010		33903	8	---	30	33929	3	---	---
DAKOTA LARAMIE	4x4	Quad Cab	No	5.5 Box	3.7L V6	3600	3600	6010		33903	8	---	0	33929	3	310	280
DAKOTA LARAMIE	4x4	Quad Cab	No	5.5 Box	4.7L V8	3600	3600	6010		33903	8	---	0	33929	3	---	---
RAM 1500 ST	4x4	Reg Cab	No	6.5 Box	4.7L V8	3900	3900	6350		33913	3,8	---	20	30999	3	240	230
RAM 1500 ST	4x4	Reg Cab	No	6.5 Box	5.7L V8	3900	3900	6350		33913	3,8	---	10	30999	3	230	220
RAM 1500 ST	4x4	Reg Cab	No	8.0 Box	4.7L V8	3900	3900	6600		33913	3,8	---	10	30999	3	290	250
RAM 1500 ST	4x4	Reg Cab	No	8.0 Box	5.7L V8	3900	3900	6600		33913	3,8	---	30	30999	3	500	460
RAM 1500 ST	4x4	Quad Cab	No	6.5 Box	4.7L V8	3900	3900	6700		33913	3,8	---	0	30999	3	480	440
RAM 1500 ST	4x4	Quad Cab	No	6.5 Box	5.7L V8	3900	3900	6700		33913	3,8	---	0	30999	3	---	---
RAM 1500 ST	4x4	Quad Cab	No	8.0 Box	4.7L V8	3900	3900	6800		33913	3,8	---	0	30999	3	---	---
RAM 1500 ST	4x4	Quad Cab	No	8.0 Box	5.7L V8	3900	3900	6800		33913	3,8	---	0	30999	3	---	---

Notes:

1. Ballast amounts are based on a "Representative Vehicle," defined in the vehicle selection guide instructions, and must be modified for all other configurations for axle and GVWR compliance.
3. Requires bumper notching.
8. These Snowplows Are For Personal/Homeowner Use Only.

2008 Dodge

Section 1
Suburbanite™ & MIDWEIGHT™ Blades

	Suburbanite™		MIDWEIGHT™	
	6'-8" POLY	7'-4" POLY	7'-6" STEEL	7'-6" POLY
Plow	SUB68	SUB74	IUTM75	IUTMY75
Blade Assembly	27546	27548	64340	64330
AQ&L Assembly Box 1	27550		64336	
AQ&L Assembly Box 2	n/a		67992	
Hydraulic Kit	27516		64620	
Light Kit	64100		28800	
Choose a Module	DRLs: 29070, Non-DRLs: 29060		DRLs: 29070, Non-DRLs: 29060	
Choose a Joystick Control	56369		56369	
or Hand-Held Control	56462		56462	

Model		Body Style	DRW	Box Option	Engine Type	Min FGAWR	Min RGAWR	Min GVWR	Harness Kit	Personal Plow System		Ballast Guidelines, lbs (1)		UltraMount® System		Ballast Guidelines, lbs (1)	
										Mount Kit	Notes			Mount Kit	Notes		
RAM 1500 SLT	4x4	Reg Cab	No	6.5 Box	4.7L V8	3900	3900	6350	H13 use 29049	33913	3,8	---	30	30999	3	250	250
RAM 1500 SLT	4x4	Reg Cab	No	6.5 Box	5.7L V8	3900	3900	6350		33913	3,8	---	20	30999	3	240	240
RAM 1500 SLT	4x4	Reg Cab	No	8.0 Box	4.7L V8	3900	3900	6600		33913	3,8	---	40	30999	3	390	350
RAM 1500 SLT	4x4	Reg Cab	No	8.0 Box	5.7L V8	3900	3900	6600		33913	3,8	---	40	30999	3	---	500
RAM 1500 SLT	4x4	Quad Cab	No	6.5 Box	4.7L V8	3900	3900	6700		33913	3,8	---	0	30999	3	---	510
RAM 1500 SLT	4x4	Quad Cab	No	6.5 Box	5.7L V8	3900	3900	6700		33913	3,8	---	0	30999	3	---	---
RAM 1500 SLT	4x4	Quad Cab	No	8.0 Box	4.7L V8	3900	3900	6800		33913	3,8	---	0	30999	3	---	---
RAM 1500 SLT	4x4	Quad Cab	No	8.0 Box	5.7L V8	3900	3900	6800		33913	3,8	---	0	30999	3	---	---
RAM 1500 SLT	4x4	Mega Cab	No	6.5 Box	5.7L V8	5200	6010	8510		n/a	---	---	---	63883-2	2,3	0	0
RAM 1500 SLT+20" tires	4x4	Reg Cab	No	6.5 Box	4.7L V8	3900	3900	6350		33913	3,8	---	20	30999	3	240	230
RAM 1500 SLT+20" tires	4x4	Reg Cab	No	6.5 Box	5.7L V8	3900	3900	6350		33913	3,8	---	10	30999	3	230	220
RAM 1500 SLT+20" tires	4x4	Quad Cab	No	6.5 Box	4.7L V8	3900	3900	6700		33913	3,8	---	0	30999	3	---	---
RAM 1500 SLT+20" tires	4x4	Quad Cab	No	6.5 Box	5.7L V8	3900	3900	6700		33913	3,8	---	0	30999	3	---	---
RAM 1500 LARAMIE	4x4	Quad Cab	No	6.5 Box	5.7L V8	3900	3900	6700		33913	3,8	---	0	n/a	---	---	---
RAM 1500 LARAMIE	4x4	Mega Cab	No	6.5 Box	5.7L V8	5200	6010	8510		n/a	---	---	---	63883-2	2,3	0	0
RAM 1500 LARAMIE+20" tires	4x4	Quad Cab	No	6.5 Box	5.7L V8	3900	3900	6700		33913	3,8	---	0	n/a	---	---	---
RAM 2500 ST	4x4	Reg Cab	No	8.0 Box	5.7L V8	5200	6000	8650		n/a	---	---	---	63883-2	2,3	160	150
RAM 2500 ST	4x4	Reg Cab	No	8.0 Box	6.7L D	5200	6000	9000		n/a	---	---	---	63883-2	2,3	490	490
RAM 2500 ST	4x4	Quad Cab	No	6.5 Box	5.7L V8	5200	6000	8800		n/a	---	---	---	63883-2	2,3	80	70
RAM 2500 ST	4x4	Quad Cab	No	6.5 Box	6.7L D	5200	6000	9000		n/a	---	---	---	63883-2	2,3	380	380
RAM 2500 ST	4x4	Quad Cab	No	8.0 Box	5.7L V8	5200	6000	8800		n/a	---	---	---	63883-2	2,3	120	110
RAM 2500 ST	4x4	Quad Cab	No	8.0 Box	6.7L D	5200	6000	9000		n/a	---	---	---	63883-2	2,3	870	820
RAM 2500 SLT	4x4	Reg Cab	No	8.0 Box	5.7L V8	5200	6010	8650		n/a	---	---	---	63883-2	2,3	170	160
RAM 2500 SLT	4x4	Reg Cab	No	8.0 Box	6.7L D	5200	6000	9000		n/a	---	---	---	63883-2	2,3	510	500
RAM 2500 SLT	4x4	Quad Cab	No	6.5 Box	5.7L V8	5200	6010	8800		n/a	---	---	---	63883-2	2,3	100	90
RAM 2500 SLT	4x4	Quad Cab	No	6.5 Box	6.7L D	5200	6000	9000		n/a	---	---	---	63883-2	2,3	410	400
RAM 2500 SLT	4x4	Quad Cab	No	8.0 Box	5.7L V8	5200	6010	8800		n/a	---	---	---	63883-2	2,3	150	140
RAM 2500 SLT	4x4	Quad Cab	No	8.0 Box	6.7L D	5200	6000	9000		n/a	---	---	---	63883-2	2,3	990	940
RAM 2500 SLT	4x4	Mega Cab	No	6.5 Box	5.7L V8	5200	6010	8800		n/a	---	---	---	63883-2	2,3	0	0
RAM 2500 LARAMIE	4x4	Quad Cab	No	6.5 Box	5.7L V8	5200	6010	8800		n/a	---	---	---	63883-2	2,3	90	80
RAM 2500 LARAMIE	4x4	Quad Cab	No	6.5 Box	6.7L D	5200	6000	9000		n/a	---	---	---	63883-2	2,3	530	490
RAM 2500 LARAMIE	4x4	Quad Cab	No	8.0 Box	5.7L V8	5200	6010	8800		n/a	---	---	---	63883-2	2,3	130	130
RAM 2500 LARAMIE	4x4	Mega Cab	No	6.5 Box	5.7L V8	5200	6010	8800		n/a	---	---	---	63883-2	2,3	0	0

Notes:
1. Ballast amounts are based on a "Representative Vehicle," defined in the vehicle selection guide instructions, and must be modified for all other configurations for axle and GVWR compliance.
2. Recommended snowplow prep package whenever available.
3. Requires bumper notching.
8. These Snowplows Are For Personal/Homeowner Use Only.

2008 Dodge/Sterling

Section 2
PRO-PLOW®, PRO PLUS® & Heavy Weight Blades

	UltraMount									UniMount
	PRO-PLOW®					PRO PLUS®				Heavy Weight
	7'-6" STEEL	7'-6" POLY	8' STEEL	8' POLY	8'-6" STEEL	7'-6" STEEL	8' STEEL	8'-6" STEEL	9' STEEL	9' STEEL / 10' STEEL
Plow	IUTP75	IUTPY75	IUTP80	IUTPY80	IUTP85	IUTPP75	IUTPP80	IUTPP85	IUTPP90	IUHW90 / IUHW10
Blade Assembly	60381	62400	60390	62450	60308	64750	66980	66974	66901	62301 / 62302
AQ&L Assembly Box 1	67950					66490				62298-1
AQ&L Assembly Box 2	67951-2									62299-1
Hydraulic Kit	64588					64999				64400
Light Kit	28800									28800 & 28340
Choose a Module	DRLs: 29070, Non-DRLs: 29060									DRLs: 29070, Non-DRLs: 29060
Choose a Joystick Control	56369									56369
or Hand-Held Control	56462									56462

Model		Body Style	DRW	Box Option	Engine Type	Min FGAWR	Min RGAWR	Min GVWR	Harness Kit	UltraMount® System Mount Kit	UltraMount® System Notes	Ballast Guidelines, lbs (1)									UniMount® System Mount Kit	UniMount® System Notes	Ballast Guidelines, lbs (1)	
RAM 1500 ST	4x4	Reg Cab	No	6.5 Box	4.7L V8	3900	3900	6350		30999	3	460	---	---	---	---	---	---	---	---	n/a	---	---	---
RAM 1500 SLT	4x4	Reg Cab	No	6.5 Box	4.7L V8	3900	3900	6350		30999	3	460	---	---	---	---	---	---	---	---	n/a	---	---	---
RAM 1500 SLT	4x4	Mega Cab	No	6.5 Box	5.7L V8	5200	6010	8510		63883-2	2,3	80	120	90	120	110	200	---	---	---	n/a	---	---	---
RAM 1500 LARAMIE	4x4	Mega Cab	No	6.5 Box	5.7L V8	5200	6010	8510		63883-2	2,3	90	130	110	140	120	210	---	---	---	n/a	---	---	---
RAM 2500 ST	4x4	Reg Cab	No	8.0 Box	5.7L V8	5200	6000	8650		63883-2	2,3	280	320	300	330	310	400	420	440	450	n/a	---	---	---
RAM 2500 ST	4x4	Quad Cab	No	6.5 Box	5.7L V8	5200	6000	8800		63883-2	2,3	200	240	220	250	230	330	340	360	380	n/a	---	---	---
RAM 2500 ST	4x4	Quad Cab	No	8.0 Box	5.7L V8	5200	6000	8800		63883-2	2,3	240	280	260	290	270	360	370	390	410	n/a	---	---	---
RAM 2500 SLT	4x4	Reg Cab	No	8.0 Box	5.7L V8	5200	6010	8650		63883-2	2,3	290	340	310	340	330	420	430	450	470	n/a	---	---	---
RAM 2500 SLT	4x4	Quad Cab	No	6.5 Box	5.7L V8	5200	6010	8800		63883-2	2,3	220	270	240	270	260	350	370	380	400	n/a	---	---	---
RAM 2500 SLT	4x4	Quad Cab	No	8.0 Box	5.7L V8	5200	6010	8800		63883-2	2,3	270	310	280	310	300	380	400	410	430	n/a	---	---	---
RAM 2500 SLT	4x4	Mega Cab	No	6.5 Box	5.7L V8	5200	6010	8800		63883-2	2,3	100	140	110	140	130	220	230	250	260	n/a	---	---	---
RAM 2500 LARAMIE	4x4	Quad Cab	No	6.5 Box	5.7L V8	5200	6010	8800		63883-2	2,3	210	250	230	260	240	340	350	370	390	n/a	---	---	---
RAM 2500 LARAMIE	4x4	Quad Cab	No	8.0 Box	5.7L V8	5200	6010	8800		63883-2	2,3	250	290	270	300	280	370	390	400	420	n/a	---	---	---
RAM 2500 LARAMIE	4x4	Mega Cab	No	6.5 Box	5.7L V8	5200	6010	8800		63883-2	2,3	110	150	130	160	140	230	250	260	280	n/a	---	---	---
RAM 3500 LARAMIE	4x4	Quad Cab	Yes	8.0 Box	5.7L V8	5200	9350	11500		63883-2	2,3	---	---	---	---	30	---	---	150	170	n/a	---	---	---
RAM 3500 Chassis	4x4	n/a	No	n/a	n/a	n/a	n/a	8501	H13 use 29049	63883-2	2,3	?	?	?	?	?	?	?	?	?	n/a	---	---	---
RAM 3500 Chassis	4x4	n/a	Yes	n/a	n/a	n/a	n/a	8501		63883-2	2,3	---	---	---	---	?	---	---	?	?	n/a	---	---	---
RAM 3500 Chassis	4x2	n/a	No	Chassis	n/a	n/a	n/a	8501		63883-2	2,3	?	?	?	?	?	?	?	?	?	n/a	---	---	---
RAM 3500 Chassis	4x2	n/a	Yes	Chassis	n/a	n/a	n/a	8501		63883-2	2,3	---	---	---	---	?	---	---	?	?	n/a	---	---	---
RAM 3500 ST	4x4	Reg Cab	Yes	8.0 Box	5.7L V8	5200	9350	11500		63883-2	2,3	---	---	---	---	50	---	---	170	190	n/a	---	---	---
RAM 3500 ST	4x4	Quad Cab	No	6.5 Box	6.7L D	5200	6200	10100		63883-2	2,3	900	---	1000	---	---	---	---	---	---	n/a	---	---	---
RAM 3500 ST	4x4	Quad Cab	Yes	8.0 Box	5.7L V8	5200	9350	11500		63883-2	2,3	---	---	---	---	10	---	---	130	140	n/a	---	---	---
RAM 3500 SLT	4x4	Reg Cab	Yes	8.0 Box	5.7L V8	5200	9350	11500		63883-2	2,3	---	---	---	---	50	---	---	180	190	n/a	---	---	---
RAM 3500 SLT	4x4	Quad Cab	Yes	8.0 Box	5.7L V8	5200	9350	11500		63883-2	2,3	---	---	---	---	20	---	---	140	150	n/a	---	---	---
RAM 4500	4x4	n/a	Yes	n/a	n/a	n/a	n/a	10000		33939	2,3,10	---	---	---	---	---	---	---	?	?	n/a	---	---	---
RAM 4500	4x2	n/a	Yes	n/a	n/a	n/a	n/a	10000		33939	2,3,10	---	---	---	---	---	---	---	?	?	n/a	---	---	---
RAM 5500	4x4	n/a	Yes	n/a	n/a	n/a	n/a	10000		33939	2,3,10	---	---	---	---	---	---	---	?	?	n/a	---	---	---
RAM 5500	4x2	n/a	Yes	n/a	n/a	n/a	n/a	10000		33939	2,3,10	---	---	---	---	---	---	---	?	?	n/a	---	---	---
BULLET 45	4x4	n/a	Yes	n/a	n/a	n/a	n/a	10000		33939	2,3,10	---	---	---	---	---	---	---	?	?	n/a	---	---	---
BULLET 45	4x2	n/a	Yes	n/a	n/a	n/a	n/a	10000		33939	2,3,10	---	---	---	---	---	---	---	?	?	n/a	---	---	---
BULLET 55	4x4	n/a	Yes	n/a	n/a	n/a	n/a	10000		33939	2,3,10	---	---	---	---	---	---	---	?	?	n/a	---	---	---
BULLET 55	4x2	n/a	Yes	n/a	n/a	n/a	n/a	10000		33939	2,3,10	---	---	---	---	---	---	---	?	?	n/a	---	---	---

Notes:
1. Ballast amounts are based on a "Representative Vehicle," defined in the vehicle selection guide instructions, and must be modified for all other configurations for axle and GVWR compliance.
2. Recommended snowplow prep package whenever available.
3. Requires bumper notching.
10. May require bumper or air dam notching.

2008 Dodge/Sterling

Section 3
MVP PLUS™ & WIDE-OUT™ Blades

	UltraMount®						
	MVP PLUS™						WIDE-OUT™
	7'-6" STEEL	7'-6" POLY	8'-6" STEEL	8'-6" POLY	9'-6" STEEL	9'-6" POLY	8'–10' STEEL
Plow	IUTMVPP75	IUTMVPPY75	IUTMVPP85	IUTMVPPY85	IUTMVPP95	IUTMVPPY95	IUTWO810
Blade Assembly	44475-1	44575-1	44485-1	44585-1	44495-1	44595-1	51810
AQ&L Assembly Box 1	44225-1						51225
AQ&L Assembly Box 2	n/a						
Hydraulic Kit	n/a						
Light Kit	n/a						
Choose a Module	DRLs: 29070, Non-DRLs: 29060						
Choose a Joystick Control	96400						n/a
or Hand-Held Control	96500						

Model		Body Style	DRW	Box Option	Engine Type	Min FGAWR	Min RGAWR	Min GVWR	Harness Kit	UltraMount® System Mount Kit	UltraMount® System Notes	Ballast Guidelines, lbs (1)						
RAM 1500 SLT	4x4	Mega Cab	No	6.5 Box	5.7L V8	5200	6010	8510	H13 use 29049	63883-2	2,3	190	160	---	---	---	---	---
RAM 1500 LARAMIE	4x4	Mega Cab	No	6.5 Box	5.7L V8	5200	6010	8510		63883-2	2,3	200	180	---	---	---	---	---
RAM 2500 ST	4x4	Reg Cab	No	8.0 Box	5.7L V8	5200	6000	8650		63883-2	2,3	390	360	430	400	530	490	550
RAM 2500 ST	4x4	Quad Cab	No	6.5 Box	5.7L V8	5200	6000	8800		63883-2	2,3	310	290	350	330	450	410	480
RAM 2500 ST	4x4	Quad Cab	No	8.0 Box	5.7L V8	5200	6000	8800		63883-2	2,3	350	320	390	360	480	450	500
RAM 2500 SLT	4x4	Reg Cab	No	8.0 Box	5.7L V8	5200	6010	8650		63883-2	2,3	400	380	450	420	540	510	570
RAM 2500 SLT	4x4	Quad Cab	No	6.5 Box	5.7L V8	5200	6010	8800		63883-2	2,3	330	310	380	350	470	440	500
RAM 2500 SLT	4x4	Quad Cab	No	8.0 Box	5.7L V8	5200	6010	8800		63883-2	2,3	370	350	410	390	510	470	530
RAM 2500 SLT	4x4	Mega Cab	No	6.5 Box	5.7L V8	5200	6010	8800		63883-2	2,3	210	180	250	220	340	310	360
RAM 2500 LARAMIE	4x4	Quad Cab	No	6.5 Box	5.7L V8	5200	6010	8800		63883-2	2,3	320	300	370	340	460	420	490
RAM 2500 LARAMIE	4x4	Quad Cab	No	8.0 Box	5.7L V8	5200	6010	8800		63883-2	2,3	360	340	400	380	490	460	510
RAM 2500 LARAMIE	4x4	Mega Cab	No	6.5 Box	5.7L V8	5200	6010	8800		63883-2	2,3	220	200	260	240	360	320	380
RAM 3500 LARAMIE	4x4	Quad Cab	Yes	8.0 Box	5.7L V8	5200	9350	11500		63883-2	2,3	---	---	150	120	240	210	260
RAM 3500 Chassis	4x4	n/a	No	n/a	n/a	n/a	n/a	8501		63883-2	2,3	?	?	?	?	?	?	?
RAM 3500 Chassis	4x4	n/a	Yes	n/a	n/a	n/a	n/a	8501		63883-2	2,3	---	---	?	?	?	?	?
RAM 3500 Chassis	4x2	n/a	No	Chassis	n/a	n/a	n/a	8501		63883-2	2,3	?	?	?	?	?	?	?
RAM 3500 Chassis	4x2	n/a	Yes	Chassis	n/a	n/a	n/a	8501		63883-2	2,3	---	---	?	?	?	?	?
RAM 3500 ST	4x4	Reg Cab	Yes	8.0 Box	5.7L V8	5200	9350	11500		63883-2	2,3	---	---	160	140	260	220	280
RAM 3500 ST	4x4	Quad Cab	Yes	8.0 Box	5.7L V8	5200	9350	11500		63883-2	2,3	---	---	130	100	220	180	240
RAM 3500 SLT	4x4	Reg Cab	Yes	8.0 Box	5.7L V8	5200	9350	11500		63883-2	2,3	---	---	170	150	270	230	290
RAM 3500 SLT	4x4	Quad Cab	Yes	8.0 Box	5.7L V8	5200	9350	11500		63883-2	2,3	---	---	140	110	230	190	250
RAM 4500	4x4	n/a	Yes	n/a	n/a	n/a	n/a	10000		33939	2,3,10	---	---	?	?	?	?	?
RAM 4500	4x2	n/a	Yes	n/a	n/a	n/a	n/a	10000		33939	2,3,10	---	---	?	?	?	?	?
RAM 5500	4x4	n/a	Yes	n/a	n/a	n/a	n/a	10000		33939	2,3,10	---	---	?	?	?	?	?
RAM 5500	4x2	n/a	Yes	n/a	n/a	n/a	n/a	10000		33939	2,3,10	---	---	?	?	?	?	?
BULLET 45	4x4	n/a	Yes	n/a	n/a	n/a	n/a	10000		33939	2,3,10	---	---	?	?	?	?	?
BULLET 45	4x2	n/a	Yes	n/a	n/a	n/a	n/a	10000		33939	2,3,10	---	---	?	?	?	?	?
BULLET 55	4x4	n/a	Yes	n/a	n/a	n/a	n/a	10000		33939	2,3,10	---	---	?	?	?	?	?
BULLET 55	4x2	n/a	Yes	n/a	n/a	n/a	n/a	10000		33939	2,3,10	---	---	?	?	?	?	?

Notes:
1. Ballast amounts are based on a "Representative Vehicle," defined in the vehicle selection guide instructions, and must be modified for all other configurations for axle and GVWR compliance.
2. Recommended snowplow prep package whenever available.
3. Requires bumper notching.
10. May require bumper or air dam notching.

2008 Ford

Section 1
Suburbanite™ & MIDWEIGHT™ Blades

	Suburbanite™		MIDWEIGHT™	
	6'-8" POLY	7'-4" POLY	7'-6" STEEL	7'-6" POLY
Plow	SUB68	SUB74	IUTM75	IUTMY75
Blade Assembly	27546	27548	64340	64330
AQ&L Assembly Box 1	27550		64336	
AQ&L Assembly Box 2	n/a		67992	
Hydraulic Kit	27516		64620	
Light Kit	64100		28800	
Choose a Module	DRLs: 29070, Non-DRLs: 29060		DRLs: 29070, Non-DRLs: 29060	
Choose a Joystick Control	56369		56369	
or Hand-Held Control	56462		56462	

Model		Body Style	DRW	Box Option	Engine Type	Min FGAWR	Min RGAWR	Min GVWR	Harness Kit	Personal Plow System		Ballast Guidelines, lbs (1)		UltraMount® System		Ballast Guidelines, lbs (1)	
										Mount Kit	Notes			Mount Kit	Notes		
EXPLORER SPORT TRAC	4x4	---	No	4.0 Box	4.0L V6	3140	3340	6160	H13 use 29049	31243	8	230	350	n/a	---	---	---
EXPLORER SPORT TRAC	4x4	---	No	4.0 Box	4.6L V8	3140	3340	6193		31243	8	640	---	n/a	---	---	---
RANGER	4x4	Reg Cab	No	6.0 Box	3.0L V6	2710	2750	5000	HB5 use 29050	1203	8	80	100	n/a	---	---	---
RANGER	4x4	Reg Cab	No	6.0 Box	3.0L V6	2710	2550	4780		1203	8	80	100	n/a	---	---	---
RANGER	4x4	Reg Cab	No	6.0 Box	3.0L V6	2510	2750	5000		1203	8	470	560	n/a	---	---	---
RANGER	4x4	Reg Cab	No	6.0 Box	3.0L V6	2510	2550	4780		1203	8	470	560	n/a	---	---	---
RANGER	4x4	Reg Cab	No	7.0 Box	4.0L V6	2710	2750	5040		1203	8	70	90	n/a	---	---	---
RANGER	4x4	Reg Cab	No	7.0 Box	4.0L V6	2710	2550	4840		1203	8	70	90	n/a	---	---	---
RANGER	4x4	Reg Cab	No	7.0 Box	4.0L V6	2510	2750	5040		1203	8	560	640	n/a	---	---	---
RANGER	4x4	Reg Cab	No	7.0 Box	4.0L V6	2510	2550	4840		1203	8	560	---	n/a	---	---	---
RANGER	4x4	Super Cab	No	6.0 Box	4.0L V6	2850	2750	5380		1203	8	310	400	n/a	---	---	---
RANGER	4x4	Super Cab	No	6.0 Box	4.0L V6	2850	2750	5280		1203	8	100	120	n/a	---	---	---
RANGER	4x4	Super Cab	No	6.0 Box	4.0L V6	2850	2750	5140		1203	8	100	120	n/a	---	---	---
RANGER	4x4	Super Cab	No	6.0 Box	4.0L V6	2850	2600	5140		1203	8	100	120	n/a	---	---	---
RANGER	4x4	Super Cab	No	6.0 Box	4.0L V6	2850	2600	5000		1203	8	100	120	n/a	---	---	---
RANGER	4x4	Super Cab	No	6.0 Box	4.0L V6	2710	2750	5280		1203	8	350	440	n/a	---	---	---
RANGER	4x4	Super Cab	No	6.0 Box	4.0L V6	2710	2750	5140		1203	8	350	440	n/a	---	---	---
RANGER	4x4	Super Cab	No	6.0 Box	4.0L V6	2710	2600	5140		1203	8	350	440	n/a	---	---	---
RANGER	4x4	Super Cab	No	6.0 Box	4.0L V6	2710	2600	5000		1203	8	350	440	n/a	---	---	---
F150	4x4	Reg Cab	No	6.5 Box	4.6L V8	3600	3500	6800	H13 use 29049	1233	8	---	0	64500	3	930	890
F150	4x4	Reg Cab	No	6.5 Box	4.6L V8	3450	3500	6800		1233	8	---	10	64500	3	---	---
F150	4x4	Reg Cab	No	6.5 Box	4.6L V8	3400	3500	6800		1233	8	---	180	64500	3	---	---
F150	4x4	Reg Cab	No	6.5 Box	5.4L V8	3600	3500	6850		1233	8	---	0	64500	3	---	---
F150	4x4	Reg Cab	No	6.5 Box	5.4L V8	3450	3500	6850		1233	8	---	350	64500	3	---	---
F150	4x4	Reg Cab	No	6.5 Box	5.4L V8	3400	3500	6850		1233	8	---	510	64500	3	---	---
F150	4x4	Reg Cab	No	8.0 Box	4.6L V8	3600	3800	6950		1233	8	---	40	64500	3	---	---
F150	4x4	Reg Cab	No	8.0 Box	4.6L V8	3450	3800	6950		1233	8	---	550	64500	3	---	---
F150	4x4	Reg Cab	No	8.0 Box	5.4L V8	4300	4800	8200		1233	8	---	0	64500	3	210	200
F150	4x4	Reg Cab	No	8.0 Box	5.4L V8	4050	4800	8200		1233	8	---	0	64500	3	440	390
F150	4x4	Reg Cab	No	8.0 Box	5.4L V8	3750	3850	6950		1233	8	---	50	64500	3	---	---
F150	4x4	Reg Cab	No	8.0 Box	5.4L V8	3600	3850	6950		1233	8	---	380	64500	3	---	---
F150	4x4	Super Cab	No	5.5 Box	4.6L V8	3750	3800	6900		1233	8	---	0	64500	3	810	760
F150	4x4	Super Cab	No	5.5 Box	5.4L V8	3750	3850	7150		1233	8	---	0	64500	3	---	---
F150	4x4	Super Cab	No	5.5 Box	5.4L V8	3600	3850	7150		1233	8	---	370	64500	3	---	---

Notes:
1. Ballast amounts are based on a "Representative Vehicle," defined in the vehicle selection guide instructions, and must be modified for all other configurations for axle and GVWR compliance.
3. Requires bumper notching.
8. These Snowplows Are For Personal/Homeowner Use Only.

2008 Ford

Section 1
Suburbanite™ & MIDWEIGHT™ Blades

	Suburbanite™		MIDWEIGHT™	
	6'-8" POLY	7'-4" POLY	7'-6" STEEL	7'-6" POLY
Plow	SUB68	SUB74	IUTM75	IUTMY75
Blade Assembly	27546	27548	64340	64330
AQ&L Assembly Box 1	27550		64336	
AQ&L Assembly Box 2	n/a		67992	
Hydraulic Kit	27516		64620	
Light Kit	64100		28800	
Choose a Module	DRLs: 29070, Non-DRLs: 29060		DRLs: 29070, Non-DRLs: 29060	
Choose a Joystick Control	56369		56369	
or Hand-Held Control	56462		56462	

Model		Body Style	DRW	Box Option	Engine Type	Min FGAWR	Min RGAWR	Min GVWR	Harness Kit	Personal Plow System		Ballast Guidelines, lbs (1)		UltraMount® System		Ballast Guidelines, lbs (1)	
										Mount Kit	Notes			Mount Kit	Notes		
F150	4x4	Super Cab	No	6.5 Box	4.6L V8	3900	3800	6950	H13 use 29049	1233	8	---	0	64500	3	650	610
F150	4x4	Super Cab	No	6.5 Box	4.6L V8	3750	3800	6950		1233	8	---	0	64500	3	---	---
F150	4x4	Super Cab	No	6.5 Box	4.6L V8	3600	3800	6950		1233	8	---	330	64500	3	---	---
F150	4x4	Super Cab	No	6.5 Box	5.4L V8	3900	3850	7200		1233	8	---	0	64500	3	---	---
F150	4x4	Super Cab	No	6.5 Box	5.4L V8	3750	3850	7200		1233	8	---	0	64500	3	---	---
F150	4x4	Super Cab	No	6.5 Box	5.4L V8	3600	3850	7200		1233	8	---	560	64500	3	---	---
F150	4x4	Super Cab	No	8.0 Box	5.4L V8	4300	4800	8200		1233	8	---	0	64500	3	160	160
F150	4x4	Super Cab	No	8.0 Box	5.4L V8	4050	4800	8200		1233	8	---	0	64500	3	---	---
F150	4x4	SuperCrew	No	5.5 Box	4.6L V8	3750	3800	6900		1233	8	---	0	64500	3	---	---
F150	4x4	SuperCrew	No	5.5 Box	4.6L V8	3600	3800	6900		1233	8	---	330	64500	3	---	---
F150	4x4	SuperCrew	No	5.5 Box	5.4L V8	3750	3850	7200		1233	8	---	0	64500	3	---	---
F150	4x4	SuperCrew	No	5.5 Box	5.4L V8	3600	3850	7200		1233	8	---	890	64500	3	---	---
F150	4x4	SuperCrew	No	6.5 Box	4.6L V8	3900	3800	6900		1233	8	---	0	64500	3	---	---
F150	4x4	SuperCrew	No	6.5 Box	4.6L V8	3750	3800	6900		1233	8	---	20	64500	3	---	---
F150	4x4	SuperCrew	No	6.5 Box	5.4L V8	3900	3850	7200		1233	8	---	0	64500	3	---	---
F150	4x4	SuperCrew	No	6.5 Box	5.4L V8	3750	3850	7200		1233	8	---	380	64500	3	---	---

Notes:

1. Ballast amounts are based on a "Representative Vehicle," defined in the vehicle selection guide instructions, and must be modified for all other configurations for axle and GVWR compliance.
3. Requires bumper notching.
8. These Snowplows Are For Personal/Homeowner Use Only.

2008 Ford Super Duty

Section 1
Suburbanite™ & MIDWEIGHT™ Blades

	Suburbanite™		MIDWEIGHT™	
	6'-8" POLY	7'-4" POLY	7'-6" STEEL	7'-6" POLY
Plow	SUB68	SUB74	IUTM75	IUTMY75
Blade Assembly	27546	27548	64340	64330
AQ&L Assembly Box 1	27550		64336	
AQ&L Assembly Box 2	n/a		67992	
Hydraulic Kit	27516		64620	
Light Kit	64100		28800	
Choose a Module	All: 29760-1		All: 29760-1	
Choose a Joystick Control	56369		56369	
or Hand-Held Control	56462		56462	

Model		Body Style	DRW	Box Option	Engine Type	Min FGAWR	Min RGAWR	Min GVWR	Harness Kit	Personal Plow System		Ballast Guidelines, lbs (1)		UltraMount® System		Ballast Guidelines, lbs (1)	
										Mount Kit	Notes			Mount Kit	Notes		
F250 SUPER DUTY	4x4	Reg Cab	No	8.0 Box	5.4L V8	5600	6100	9000	H13 use 29049 or 2B use 29051	n/a	---	---	---	31269	10,48	170	160
F250 SUPER DUTY	4x4	Reg Cab	No	8.0 Box	6.4L D	6000	6100	9600		n/a	---	---	---	31269	10,48	430	430
F250 SUPER DUTY	4x4	Reg Cab	No	8.0 Box	6.8L V10	5600	6100	9200		n/a	---	---	---	31269	10,48	240	230
F250 SUPER DUTY	4x4	Reg Cab	No	Chassis	n/a	n/a	n/a	8501		n/a	---	---	---	31269	10,48	?	?
F250 SUPER DUTY	4x4	Super Cab	No	6.8 Box	5.4L V8	5600	6100	9200		n/a	---	---	---	31269	10,48	140	130
F250 SUPER DUTY	4x4	Super Cab	No	6.8 Box	6.4L D	6000	6100	9800		n/a	---	---	---	31269	10,48	380	370
F250 SUPER DUTY	4x4	Super Cab	No	6.8 Box	6.8L V10	5600	6100	9400		n/a	---	---	---	31269	10,48	160	160
F250 SUPER DUTY	4x4	Super Cab	No	8.0 Box	5.4L V8	5600	6100	9400		n/a	---	---	---	31269	10,48	130	130
F250 SUPER DUTY	4x4	Super Cab	No	8.0 Box	6.4L D	6000	6100	9900		n/a	---	---	---	31269	10,48	410	400
F250 SUPER DUTY	4x4	Super Cab	No	8.0 Box	6.8L V10	6000	6100	9600		n/a	---	---	---	31269	10,48	200	190
F250 SUPER DUTY	4x4	Super Cab	No	Chassis	n/a	n/a	n/a	8501		n/a	---	---	---	31269	10,48	?	?
F250 SUPER DUTY	4x4	Crew Cab	No	6.8 Box	5.4L V8	5600	6100	9000		n/a	---	---	---	31269	10,48	90	80
F250 SUPER DUTY	4x4	Crew Cab	No	6.8 Box	6.4L D	6000	6100	9600		n/a	---	---	---	31269	10,48	380	370
F250 SUPER DUTY	4x4	Crew Cab	No	6.8 Box	6.8L V10	5600	6100	9200		n/a	---	---	---	31269	10,48	150	140
F250 SUPER DUTY	4x4	Crew Cab	No	8.0 Box	5.4L V8	5600	6100	9400		n/a	---	---	---	31269	10,48	130	130
F250 SUPER DUTY	4x4	Crew Cab	No	8.0 Box	6.4L D	6000	6100	9900		n/a	---	---	---	31269	10,48	410	410
F250 SUPER DUTY	4x4	Crew Cab	No	8.0 Box	6.8L V10	6000	6100	9600		n/a	---	---	---	31269	10,48	190	190
F250 SUPER DUTY	4x4	Crew Cab	No	Chassis	n/a	n/a	n/a	8501		n/a	---	---	---	31269	10,48	?	?

Notes:

1. Ballast amounts are based on a "Representative Vehicle," defined in the vehicle selection guide instructions, and must be modified for all other configurations for axle and GVWR compliance.
10. May require bumper or air dam notching.
48. Snowplow prep package required until further notice.

2008 Ford

Section 2
PRO-PLOW®, PRO PLUS® & Heavy Weight Blades

	UltraMount									UniMount	
	PRO-PLOW®					PRO PLUS®				Heavy Weight	
	7'-6" STEEL	7'-6" POLY	8' STEEL	8' POLY	8'-6" STEEL	7'-6" STEEL	8' STEEL	8'-6" STEEL	9' STEEL	9' STEEL	10' STEEL
Plow	IUTP75	IUTPY75	IUTP80	IUTPY80	IUTP85	IUTPP75	IUTPP80	IUTPP85	IUTPP90	IUHW90	IUHW10
Blade Assembly	60381	62400	60390	62450	60308	64750	66980	66974	66901	62301	62302
AQ&L Assembly Box 1	67950					66490				62298-1	
AQ&L Assembly Box 2	67951-2									62299-1	
Hydraulic Kit	64588					64999				64400	
Light Kit	28800									28800 & 28340	
Choose a Module	DRLs: 29070, Non-DRLs: 29060									DRLs: 29070, Non-DRLs: 29060	
Choose a Joystick Control	56369									56369	
or Hand-Held Control	56462									56462	

Model		Body Style	DRW	Box Option	Engine Type	Min FGAWR	Min RGAWR	Min GVWR	Harness Kit	UltraMount® System		Ballast Guidelines, lbs (1)									UniMount® System		Ballast Guidelines, lbs (1)	
										Mount Kit	Notes										Mount Kit	Notes		
F150	4x4	Reg Cab	No	8.0 Box	5.4L V8	4300	4800	8200	H13 use 29049	64500	3	330	460	350	500	420	1000	---	---	---	n/a	---	---	---
F650	4x2	n/a	Yes	Chassis	n/a	n/a	n/a	10001	2B use 29053 & 29234 or HB5 use 29053 & 29235	n/a	---	---	---	---	---	---	---	---	---	---	62275	---	?	?
F650 (Low Pro)	4x2	n/a	Yes	Chassis	n/a	n/a	n/a	10001		n/a	---	---	---	---	---	---	---	---	---	---	62275	---	?	?

Notes:
1. Ballast amounts are based on a "Representative Vehicle," defined in the vehicle selection guide instructions, and must be modified for all other configurations for axle and GVWR compliance.
3. Requires bumper notching.

2008 Ford Super Duty

Section 2
PRO-PLOW®, PRO PLUS® & Heavy Weight Blades

	UltraMount									UniMount
	PRO-PLOW®					PRO PLUS®				Heavy Weight
	7'-6" STEEL	7'-6" POLY	8' STEEL	8' POLY	8'-6" STEEL	7'-6" STEEL	8' STEEL	8'-6" STEEL	9' STEEL	9' STEEL / 10' STEEL
Plow	IUTP75	IUTPY75	IUTP80	IUTPY80	IUTP85	IUTPP75	IUTPP80	IUTPP85	IUTPP90	IUHW90 / IUHW10
Blade Assembly	60381	62400	60390	62450	60308	64750	66980	66974	66901	62301 / 62302
AQ&L Assembly Box 1	67950					66490				62298-1
AQ&L Assembly Box 2	67951-2									62299-1
Hydraulic Kit	64588					64999				64400
Light Kit	28800									28800 & 28340
Choose a Module	All: 29760-1									All: 29760-1
Choose a Joystick Control	56369									56369
or Hand-Held Control	56462									56462

Model		Body Style	DRW	Box Option	Engine Type	Min FGAWR	Min RGAWR	Min GVWR	Harness Kit	UltraMount® System Mount Kit	UltraMount® System Notes	Ballast Guidelines, lbs (1)									UniMount® System Mount Kit	UniMount® System Notes	Ballast Guidelines, lbs (1)	
F250 SUPER DUTY	4x4	Reg Cab	No	8.0 Box	5.4L V8	5600	6100	9000	H13 use 29049 or 2B use 29051	31269	10,48	290	330	300	330	320	410	420	440	460	n/a	---	---	---
F250 SUPER DUTY	4x4	Reg Cab	No	8.0 Box	6.4L D	6000	6100	9600		31269	10,48	550	590	570	600	580	700	710	730	740	n/a	---	---	---
F250 SUPER DUTY	4x4	Reg Cab	No	8.0 Box	6.8L V10	5600	6100	9200		31269	10,48	350	400	370	400	390	480	490	510	520	n/a	---	---	---
F250 SUPER DUTY	4x4	Reg Cab	No	Chassis	n/a	n/a	n/a	8501		31269	10,48	?	?	?	?	?	?	?	?	?	n/a	---	---	---
F250 SUPER DUTY	4x4	Super Cab	No	6.8 Box	5.4L V8	5600	6100	9200		31269	10,48	260	300	270	300	290	380	390	410	420	n/a	---	---	---
F250 SUPER DUTY	4x4	Super Cab	No	6.8 Box	6.4L D	6000	6100	9800		31269	10,48	500	540	520	550	530	620	640	650	690	n/a	---	---	---
F250 SUPER DUTY	4x4	Super Cab	No	6.8 Box	6.8L V10	5600	6100	9400		31269	10,48	280	320	300	330	310	400	420	430	450	n/a	---	---	---
F250 SUPER DUTY	4x4	Super Cab	No	8.0 Box	5.4L V8	5600	6100	9400		31269	10,48	250	290	260	290	280	360	380	390	410	n/a	---	---	---
F250 SUPER DUTY	4x4	Super Cab	No	8.0 Box	6.4L D	6000	6100	9900		31269	10,48	530	560	540	570	560	640	680	690	710	n/a	---	---	---
F250 SUPER DUTY	4x4	Super Cab	No	8.0 Box	6.8L V10	6000	6100	9600		31269	10,48	310	350	330	360	340	430	440	460	470	n/a	---	---	---
F250 SUPER DUTY	4x4	Super Cab	No	Chassis	n/a	n/a	n/a	8501		31269	10,48	?	?	?	?	?	?	?	?	?	n/a	---	---	---
F250 SUPER DUTY	4x4	Crew Cab	No	6.8 Box	5.4L V8	5600	6100	9000		31269	10,48	210	250	220	250	240	320	340	350	370	n/a	---	---	---
F250 SUPER DUTY	4x4	Crew Cab	No	6.8 Box	6.4L D	6000	6100	9600		31269	10,48	500	540	510	540	530	610	630	640	680	n/a	---	---	---
F250 SUPER DUTY	4x4	Crew Cab	No	6.8 Box	6.8L V10	5600	6100	9200		31269	10,48	270	310	280	310	300	380	400	410	430	n/a	---	---	---
F250 SUPER DUTY	4x4	Crew Cab	No	8.0 Box	5.4L V8	5600	6100	9400		31269	10,48	250	290	260	290	280	360	370	390	400	n/a	---	---	---
F250 SUPER DUTY	4x4	Crew Cab	No	8.0 Box	6.4L D	6000	6100	9900		31269	10,48	530	570	540	570	560	640	650	690	700	n/a	---	---	---
F250 SUPER DUTY	4x4	Crew Cab	No	8.0 Box	6.8L V10	6000	6100	9600		31269	10,48	310	350	320	350	340	420	430	450	460	n/a	---	---	---
F250 SUPER DUTY	4x4	Crew Cab	No	Chassis	n/a	n/a	n/a	8501		31269	10,48	?	?	?	?	?	?	?	?	?	n/a	---	---	---
F350 SUPER DUTY	4x4	Reg Cab	No	8.0 Box	5.4L V8	5600	6390	9000		31269	10,48	250	290	270	300	280	370	390	400	420	n/a	---	---	---
F350 SUPER DUTY	4x4	Reg Cab	No	8.0 Box	6.4L D	6000	6390	9600		31269	10,48	510	560	530	560	550	640	650	690	700	n/a	---	---	---
F350 SUPER DUTY	4x4	Reg Cab	No	8.0 Box	6.8L V10	5600	6390	9200		31269	10,48	320	360	330	360	350	440	450	470	480	n/a	---	---	---
F350 SUPER DUTY	4x4	Reg Cab	No	Chassis	n/a	n/a	n/a	8501		31269	10,48	?	?	?	?	?	?	?	?	?	n/a	---	---	---
F350 SUPER DUTY	4x4	Reg Cab	Yes	8.0 Box	5.4L V8	5600	9000	12000		31269	10,48	---	---	---	---	70	---	---	190	210	n/a	---	---	---
F350 SUPER DUTY	4x4	Reg Cab	Yes	8.0 Box	6.4L D	6000	9000	12600		31269	10,48	---	---	---	---	340	---	---	460	470	n/a	---	---	---
F350 SUPER DUTY	4x4	Reg Cab	Yes	8.0 Box	6.8L V10	5600	9000	12200		31269	10,48	---	---	---	---	140	---	---	260	270	n/a	---	---	---
F350 SUPER DUTY	4x4	Reg Cab	Yes	Chassis	n/a	n/a	n/a	8501		31269	10,48	---	---	---	---	?	---	---	?	?	n/a	---	---	---
F350 SUPER DUTY	4x4	Super Cab	No	6.8 Box	5.4L V8	5600	6390	9900		31269	10,48	180	220	190	220	210	300	310	330	340	n/a	---	---	---
F350 SUPER DUTY	4x4	Super Cab	No	6.8 Box	6.4L D	6000	6390	9900		31269	10,48	460	500	480	510	490	580	600	610	630	n/a	---	---	---
F350 SUPER DUTY	4x4	Super Cab	No	6.8 Box	6.8L V10	5600	6390	9900		31269	10,48	240	280	260	290	270	360	380	390	410	n/a	---	---	---
F350 SUPER DUTY	4x4	Super Cab	No	8.0 Box	5.4L V8	5600	6390	9900		31269	10,48	210	250	220	250	240	320	340	350	370	n/a	---	---	---
F350 SUPER DUTY	4x4	Super Cab	No	8.0 Box	6.4L D	6000	6390	9900		31269	10,48	490	520	500	530	520	600	620	630	650	n/a	---	---	---
F350 SUPER DUTY	4x4	Super Cab	No	8.0 Box	6.8L V10	6000	6390	9900		31269	10,48	270	310	290	320	300	390	400	420	430	n/a	---	---	---
F350 SUPER DUTY	4x4	Super Cab	No	Chassis	n/a	n/a	n/a	8501		31269	10,48	?	?	?	?	?	?	?	?	?	n/a	---	---	---

Notes:
1. Ballast amounts are based on a "Representative Vehicle," defined in the vehicle selection guide instructions, and must be modified for all other configurations for axle and GVWR compliance.
10. May require bumper or air dam notching.
48. Snowplow prep package required until further notice.

2008 Ford Super Duty

Section 2

PRO-PLOW®, PRO PLUS® & Heavy Weight Blades

	UltraMount									UniMount
	PRO-PLOW®					PRO PLUS®				Heavy Weight
	7'-6" STEEL	7'-6" POLY	8' STEEL	8' POLY	8'-6" STEEL	7'-6" STEEL	8' STEEL	8'-6" STEEL	9' STEEL	9' STEEL / 10' STEEL
Plow	IUTP75	IUTPY75	IUTP80	IUTPY80	IUTP85	IUTPP75	IUTPP80	IUTPP85	IUTPP90	IUHW90 / IUHW10
Blade Assembly	60381	62400	60390	62450	60308	64750	66980	66974	66901	62301 / 62302
AQ&L Assembly Box 1	67950					66490				62298-1
AQ&L Assembly Box 2	67951-2									62299-1
Hydraulic Kit	64588					64999				64400
Light Kit	28800									28800 & 28340
Choose a Module	All: 29760-1									All: 29760-1
Choose a Joystick Control	56369									56369
or Hand-Held Control	56462									56462

Model		Body Style	DRW	Box Option	Engine Type	Min FGAWR	Min RGAWR	Min GVWR	Harness Kit	UltraMount® System Mount Kit	UltraMount® System Notes	Ballast Guidelines, lbs (1)									UniMount® System Mount Kit	UniMount® System Notes	Ballast Guidelines, lbs (1)	
F350 SUPER DUTY	4x4	Super Cab	Yes	8.0 Box	5.4L V8	5600	9000	12400	H13 use 29049 or 2B use 29051	31269	10,48	---	---	---	---	20	---	---	130	150	n/a	---	---	---
F350 SUPER DUTY	4x4	Super Cab	Yes	8.0 Box	6.4L D	6000	9000	13000		31269	10,48	---	---	---	---	300	---	---	410	430	n/a	---	---	---
F350 SUPER DUTY	4x4	Super Cab	Yes	8.0 Box	6.8L V10	6000	9000	12600		31269	10,48	---	---	---	---	80	---	---	200	210	n/a	---	---	---
F350 SUPER DUTY	4x4	Super Cab	Yes	Chassis	n/a	n/a	n/a	8501		31269	10,48	---	---	---	---	?	---	---	?	?	n/a	---	---	---
F350 SUPER DUTY	4x4	Crew Cab	No	6.8 Box	5.4L V8	5600	6390	9900		31269	10,48	170	210	180	210	200	280	300	310	330	n/a	---	---	---
F350 SUPER DUTY	4x4	Crew Cab	No	6.8 Box	6.4L D	6000	6390	9900		31269	10,48	460	500	470	500	490	570	590	600	620	n/a	---	---	---
F350 SUPER DUTY	4x4	Crew Cab	No	6.8 Box	6.8L V10	6000	6390	9900		31269	10,48	230	270	240	270	260	340	360	370	390	n/a	---	---	---
F350 SUPER DUTY	4x4	Crew Cab	No	8.0 Box	5.4L V8	6000	6390	9900		31269	10,48	210	240	220	250	240	320	330	350	360	n/a	---	---	---
F350 SUPER DUTY	4x4	Crew Cab	No	8.0 Box	6.4L D	6000	6390	9900		31269	10,48	490	520	500	530	520	600	610	630	640	n/a	---	---	---
F350 SUPER DUTY	4x4	Crew Cab	No	8.0 Box	6.8L V10	6000	6390	9900		31269	10,48	270	300	280	310	290	380	390	410	420	n/a	---	---	---
F350 SUPER DUTY	4x4	Crew Cab	No	Chassis	n/a	n/a	n/a	8501		31269	10,48	?	?	?	?	?	?	?	?	?	n/a	---	---	---
F350 SUPER DUTY	4x4	Crew Cab	Yes	6.8 Box	6.4L D	6000	9000	13000		31269	10,48	---	---	---	---	270	---	---	380	400	n/a	---	---	---
F350 SUPER DUTY	4x4	Crew Cab	Yes	6.8 Box	6.8L V10	6000	9000	12600		31269	10,48	---	---	---	---	40	---	---	150	170	n/a	---	---	---
F350 SUPER DUTY	4x4	Crew Cab	Yes	8.0 Box	6.4L D	6000	9000	13000		31269	10,48	---	---	---	---	290	---	---	510	600	n/a	---	---	---
F350 SUPER DUTY	4x4	Crew Cab	Yes	8.0 Box	6.8L V10	6000	9000	12600		31269	10,48	---	---	---	---	70	---	---	180	200	n/a	---	---	---
F350 SUPER DUTY	4x4	Crew Cab	Yes	Chassis	n/a	n/a	n/a	8501		31269	10,48	---	---	---	---	?	---	---	?	?	n/a	---	---	---
F450 SUPER DUTY	4x4	Reg Cab	Yes	Chassis	n/a	n/a	n/a	10000		31269	10,48	---	---	---	---	---	---	---	?	?	n/a	---	---	---
F450 SUPER DUTY	4x4	Super Cab	Yes	Chassis	n/a	n/a	n/a	10000		31269	10,48	---	---	---	---	---	---	---	?	?	n/a	---	---	---
F450 SUPER DUTY	4x4	Crew Cab	Yes	8.0 Box	6.4L D	6500	10400	14500		31269	10,48	---	---	---	---	---	---	---	250	270	n/a	---	---	---
F450 SUPER DUTY	4x4	Crew Cab	Yes	Chassis	n/a	n/a	n/a	10000		31269	10,48	---	---	---	---	---	---	---	?	?	n/a	---	---	---
F450 SUPER DUTY	4x2	Reg Cab	Yes	Chassis	n/a	n/a	n/a	10000		31269	10,48	---	---	---	---	---	---	---	?	?	n/a	---	---	---
F450 SUPER DUTY	4x2	Super Cab	Yes	Chassis	n/a	n/a	n/a	10000		31269	10,48	---	---	---	---	---	---	---	?	?	n/a	---	---	---
F450 SUPER DUTY	4x2	Crew Cab	Yes	8.0 Box	6.4L D	6500	10400	14500		31269	10,48	---	---	---	---	---	---	---	160	170	n/a	---	---	---
F450 SUPER DUTY	4x2	Crew Cab	Yes	Chassis	n/a	n/a	n/a	10000		31269	10,48	---	---	---	---	---	---	---	?	?	n/a	---	---	---
F550 SUPER DUTY	4x4	Reg Cab	Yes	Chassis	n/a	n/a	n/a	10000		31269	10,48	---	---	---	---	---	---	---	?	?	n/a	---	---	---
F550 SUPER DUTY	4x4	Super Cab	Yes	Chassis	n/a	n/a	n/a	10000		31269	10,48	---	---	---	---	---	---	---	?	?	n/a	---	---	---
F550 SUPER DUTY	4x4	Crew Cab	Yes	Chassis	n/a	n/a	n/a	10000		31269	10,48	---	---	---	---	---	---	---	?	?	n/a	---	---	---
F550 SUPER DUTY	4x2	Reg Cab	Yes	Chassis	n/a	n/a	n/a	10000		31269	10,48	---	---	---	---	---	---	---	?	?	n/a	---	---	---
F550 SUPER DUTY	4x2	Super Cab	Yes	Chassis	n/a	n/a	n/a	10000		31269	10,48	---	---	---	---	---	---	---	?	?	n/a	---	---	---
F550 SUPER DUTY	4x2	Crew Cab	Yes	Chassis	n/a	n/a	n/a	10000		31269	10,48	---	---	---	---	---	---	---	?	?	n/a	---	---	---

Notes:

1. Ballast amounts are based on a "Representative Vehicle," defined in the vehicle selection guide instructions, and must be modified for all other configurations for axle and GVWR compliance.
10. May require bumper or air dam notching.
48. Snowplow prep package required until further notice.

2008 Ford

Section 3
MVP PLUS™ & WIDE-OUT™ Blades

	UltraMount®						
	MVP PLUS™						WIDE-OUT™
	7'-6" STEEL	7'-6" POLY	8'-6" STEEL	8'-6" POLY	9'-6" STEEL	9'-6" POLY	8'–10' STEEL
Plow	IUTMVPP75	IUTMVPPY75	IUTMVPP85	IUTMVPPY85	IUTMVPP95	IUTMVPPY95	IUTWO810
Blade Assembly	44475-1	44575-1	44485-1	44585-1	44495-1	44595-1	51810
AQ&L Assembly Box 1	44225-1						51225
AQ&L Assembly Box 2	n/a						
Hydraulic Kit	n/a						
Light Kit	n/a						
Choose a Module	DRLs: 29070, Non-DRLs: 29060						
Choose a Joystick Control	96400						n/a
or Hand-Held Control	96500						

Model		Body Style	DRW	Box Option	Engine Type	Min FGAWR	Min RGAWR	Min GVWR	Harness Kit	UltraMount® System		Ballast Guidelines, lbs (1)						
										Mount Kit	Notes							
F150	4x4	Reg Cab	No	8.0 Box	5.4L V8	4300	4800	8200	H13 use 29049	64500	3	---	880	---	---	---	---	---

Notes:
1. Ballast amounts are based on a "Representative Vehicle," defined in the vehicle selection guide instructions, and must be modified for all other configurations for axle and GVWR compliance.
3. Requires bumper notching.

2008 Ford Super Duty

Section 3
MVP PLUS™ & WIDE-OUT™ Blades

	UltraMount						
	MVP PLUS™						WIDE-OUT™
	7'-6" STEEL	7'-6" POLY	8'-6" STEEL	8'-6" POLY	9'-6" STEEL	9'-6" POLY	8'–10' STEEL
Plow	IUTMVPP75	IUTMVPPY75	IUTMVPP85	IUTMVPPY85	IUTMVPP95	IUTMVPPY95	IUTWO810
Blade Assembly	44475-1	44575-1	44485-1	44585-1	44495-1	44595-1	51810
AQ&L Assembly Box 1	44225-1						51225
AQ&L Assembly Box 2	n/a						
Hydraulic Kit	n/a						
Light Kit	n/a						
Choose a Module	All: 29760-1						
Choose a Joystick Control	96400						n/a
or Hand-Held Control	96500						

Model		Body Style	DRW	Box Option	Engine Type	Min FGAWR	Min RGAWR	Min GVWR	Harness Kit	UltraMount® System		Ballast Guidelines, lbs (1)						
										Mount Kit	Notes							
F250 SUPER DUTY	4x4	Reg Cab	No	8.0 Box	5.4L V8	5600	6100	9000	H13 use 29049 or 2B use 29051	31269	10,48	390	370	430	410	530	490	550
F250 SUPER DUTY	4x4	Reg Cab	No	8.0 Box	6.4L D	6000	6100	9600		31269	10,48	680	640	720	690	820	780	840
F250 SUPER DUTY	4x4	Reg Cab	No	8.0 Box	6.8L V10	5600	6100	9200		31269	10,48	460	440	500	470	590	560	620
F250 SUPER DUTY	4x4	Reg Cab	No	Chassis	n/a	n/a	n/a	8501		31269	10,48	?	?	?	?	?	?	?
F250 SUPER DUTY	4x4	Super Cab	No	6.8 Box	5.4L V8	5600	6100	9200		31269	10,48	360	340	400	380	490	460	520
F250 SUPER DUTY	4x4	Super Cab	No	6.8 Box	6.4L D	6000	6100	9800		31269	10,48	600	580	650	620	760	730	790
F250 SUPER DUTY	4x4	Super Cab	No	6.8 Box	6.8L V10	5600	6100	9400		31269	10,48	390	360	430	400	520	490	540
F250 SUPER DUTY	4x4	Super Cab	No	8.0 Box	5.4L V8	5600	6100	9400		31269	10,48	350	330	390	370	480	450	500
F250 SUPER DUTY	4x4	Super Cab	No	8.0 Box	6.4L D	6000	6100	9900		31269	10,48	630	610	690	640	780	750	800
F250 SUPER DUTY	4x4	Super Cab	No	8.0 Box	6.8L V10	6000	6100	9600		31269	10,48	410	390	460	430	540	510	570
F250 SUPER DUTY	4x4	Super Cab	No	Chassis	n/a	n/a	n/a	8501		31269	10,48	?	?	?	?	?	?	?
F250 SUPER DUTY	4x4	Crew Cab	No	6.8 Box	5.4L V8	5600	6100	9000		31269	10,48	310	290	350	330	440	410	460
F250 SUPER DUTY	4x4	Crew Cab	No	6.8 Box	6.4L D	6000	6100	9600		31269	10,48	600	580	640	610	750	720	770
F250 SUPER DUTY	4x4	Crew Cab	No	6.8 Box	6.8L V10	5600	6100	9200		31269	10,48	370	350	410	390	500	470	520
F250 SUPER DUTY	4x4	Crew Cab	No	8.0 Box	5.4L V8	5600	6100	9400		31269	10,48	350	330	390	360	480	440	500
F250 SUPER DUTY	4x4	Crew Cab	No	8.0 Box	6.4L D	6000	6100	9900		31269	10,48	630	610	690	640	---	910	---
F250 SUPER DUTY	4x4	Crew Cab	No	8.0 Box	6.8L V10	6000	6100	9600		31269	10,48	410	390	450	420	540	500	550
F250 SUPER DUTY	4x4	Crew Cab	No	Chassis	n/a	n/a	n/a	8501		31269	10,48	?	?	?	?	?	?	?
F350 SUPER DUTY	4x4	Reg Cab	No	8.0 Box	5.4L V8	5600	6390	9000		31269	10,48	350	330	400	370	490	450	510
F350 SUPER DUTY	4x4	Reg Cab	No	8.0 Box	6.4L D	6000	6390	9600		31269	10,48	620	600	680	630	780	740	800
F350 SUPER DUTY	4x4	Reg Cab	No	8.0 Box	6.8L V10	5600	6390	9200		31269	10,48	420	400	460	440	550	520	580
F350 SUPER DUTY	4x4	Reg Cab	No	Chassis	n/a	n/a	n/a	8501		31269	10,48	?	?	?	?	?	?	?
F350 SUPER DUTY	4x4	Reg Cab	Yes	8.0 Box	5.4L V8	5600	9000	12000		31269	10,48	---	---	190	160	280	240	300
F350 SUPER DUTY	4x4	Reg Cab	Yes	8.0 Box	6.4L D	6000	9000	12600		31269	10,48	---	---	450	420	540	510	570
F350 SUPER DUTY	4x4	Reg Cab	Yes	8.0 Box	6.8L V10	5600	9000	12200		31269	10,48	---	---	250	230	340	310	370
F350 SUPER DUTY	4x4	Reg Cab	Yes	Chassis	n/a	n/a	n/a	8501		31269	10,48	---	---	?	?	?	?	?
F350 SUPER DUTY	4x4	Super Cab	No	6.8 Box	5.4L V8	5600	6390	9900		31269	10,48	280	260	320	300	410	380	440
F350 SUPER DUTY	4x4	Super Cab	No	6.8 Box	6.4L D	6000	6390	9900		31269	10,48	570	540	610	580	720	680	750
F350 SUPER DUTY	4x4	Super Cab	No	6.8 Box	6.8L V10	5600	6390	9900		31269	10,48	350	330	390	360	480	450	510

Notes:

1. Ballast amounts are based on a "Representative Vehicle," defined in the vehicle selection guide instructions, and must be modified for all other configurations for axle and GVWR compliance.
10. May require bumper or air dam notching.
48. Snowplow prep package required until further notice.

2008 Ford Super Duty

Section 3
MVP PLUS™ & WIDE-OUT™ Blades

	UltraMount						
	MVP PLUS™						WIDE-OUT™
	7'-6" STEEL	7'-6" POLY	8'-6" STEEL	8'-6" POLY	9'-6" STEEL	9'-6" POLY	8'–10' STEEL
Plow	IUTMVPP75	IUTMVPPY75	IUTMVPP85	IUTMVPPY85	IUTMVPP95	IUTMVPPY95	IUTWO810
Blade Assembly	44475-1	44575-1	44485-1	44585-1	44495-1	44595-1	51810
AQ&L Assembly Box 1	44225-1						51225
AQ&L Assembly Box 2	n/a						
Hydraulic Kit	n/a						
Light Kit	n/a						
Choose a Module	All: 29760-1						
Choose a Joystick Control	96400						n/a
or Hand-Held Control	96500						

Model		Body Style	DRW	Box Option	Engine Type	Min FGAWR	Min RGAWR	Min GVWR	Harness Kit	UltraMount® System		Ballast Guidelines, lbs (1)						
										Mount Kit	Notes							
F350 SUPER DUTY	4x4	Super Cab	No	8.0 Box	5.4L V8	5600	6390	9900	H13 use 29049 or 2B use 29051	31269	10,48	310	290	350	330	440	410	460
F350 SUPER DUTY	4x4	Super Cab	No	8.0 Box	6.4L D	6000	6390	9900		31269	10,48	590	570	630	600	850	700	800
F350 SUPER DUTY	4x4	Super Cab	No	8.0 Box	6.8L V10	6000	6390	9900		31269	10,48	370	350	420	390	500	470	530
F350 SUPER DUTY	4x4	Super Cab	No	Chassis	n/a	n/a	n/a	8501		31269	10,48	?	?	?	?	?	?	?
F350 SUPER DUTY	4x4	Super Cab	Yes	8.0 Box	5.4L V8	5600	9000	12400		31269	10,48	---	---	130	110	220	190	240
F350 SUPER DUTY	4x4	Super Cab	Yes	8.0 Box	6.4L D	6000	9000	13000		31269	10,48	---	---	410	380	940	640	890
F350 SUPER DUTY	4x4	Super Cab	Yes	8.0 Box	6.8L V10	6000	9000	12600		31269	10,48	---	---	200	170	280	250	310
F350 SUPER DUTY	4x4	Super Cab	Yes	Chassis	n/a	n/a	n/a	8501		31269	10,48	---	---	?	?	?	?	?
F350 SUPER DUTY	4x4	Crew Cab	No	6.8 Box	5.4L V8	5600	6390	9900		31269	10,48	270	250	310	280	400	370	420
F350 SUPER DUTY	4x4	Crew Cab	No	6.8 Box	6.4L D	6000	6390	9900		31269	10,48	560	540	600	570	820	670	780
F350 SUPER DUTY	4x4	Crew Cab	No	6.8 Box	6.8L V10	6000	6390	9900		31269	10,48	330	310	370	350	460	430	480
F350 SUPER DUTY	4x4	Crew Cab	No	8.0 Box	5.4L V8	6000	6390	9900		31269	10,48	310	290	350	320	440	400	450
F350 SUPER DUTY	4x4	Crew Cab	No	8.0 Box	6.4L D	6000	6390	9900		31269	10,48	590	570	630	600	---	---	---
F350 SUPER DUTY	4x4	Crew Cab	No	8.0 Box	6.8L V10	6000	6390	9900		31269	10,48	370	350	410	380	490	460	510
F350 SUPER DUTY	4x4	Crew Cab	No	Chassis	n/a	n/a	n/a	8501		31269	10,48	?	?	?	?	?	?	?
F350 SUPER DUTY	4x4	Crew Cab	Yes	6.8 Box	6.4L D	6000	9000	13000		31269	10,48	---	---	380	360	910	620	870
F350 SUPER DUTY	4x4	Crew Cab	Yes	6.8 Box	6.8L V10	6000	9000	12600		31269	10,48	---	---	150	130	240	210	260
F350 SUPER DUTY	4x4	Crew Cab	Yes	8.0 Box	6.4L D	6000	9000	13000		31269	10,48	---	---	730	490	---	---	---
F350 SUPER DUTY	4x4	Crew Cab	Yes	8.0 Box	6.8L V10	6000	9000	12600		31269	10,48	---	---	180	160	270	240	290
F350 SUPER DUTY	4x4	Crew Cab	Yes	Chassis	n/a	n/a	n/a	8501		31269	10,48	---	---	?	?	?	?	?
F450 SUPER DUTY	4x4	Reg Cab	Yes	Chassis	n/a	n/a	n/a	10000		31269	10,48	---	---	?	?	?	?	?
F450 SUPER DUTY	4x4	Super Cab	Yes	Chassis	n/a	n/a	n/a	10000		31269	10,48	---	---	?	?	?	?	?
F450 SUPER DUTY	4x4	Crew Cab	Yes	8.0 Box	6.4L D	6500	10400	14500		31269	10,48	---	---	250	230	500	310	440
F450 SUPER DUTY	4x4	Crew Cab	Yes	Chassis	n/a	n/a	n/a	10000		31269	10,48	---	---	?	?	?	?	?
F450 SUPER DUTY	4x2	Reg Cab	Yes	Chassis	n/a	n/a	n/a	10000		31269	10,48	---	---	?	?	?	?	?
F450 SUPER DUTY	4x2	Super Cab	Yes	Chassis	n/a	n/a	n/a	10000		31269	10,48	---	---	?	?	?	?	?
F450 SUPER DUTY	4x2	Crew Cab	Yes	8.0 Box	6.4L D	6500	10400	14500		31269	10,48	---	---	160	130	250	210	270
F450 SUPER DUTY	4x2	Crew Cab	Yes	Chassis	n/a	n/a	n/a	10000		31269	10,48	---	---	?	?	?	?	?
F550 SUPER DUTY	4x4	Reg Cab	Yes	Chassis	n/a	n/a	n/a	10000		31269	10,48	---	---	?	?	?	?	?
F550 SUPER DUTY	4x4	Super Cab	Yes	Chassis	n/a	n/a	n/a	10000		31269	10,48	---	---	?	?	?	?	?
F550 SUPER DUTY	4x4	Crew Cab	Yes	Chassis	n/a	n/a	n/a	10000		31269	10,48	---	---	?	?	?	?	?
F550 SUPER DUTY	4x2	Reg Cab	Yes	Chassis	n/a	n/a	n/a	10000		31269	10,48	---	---	?	?	?	?	?
F550 SUPER DUTY	4x2	Super Cab	Yes	Chassis	n/a	n/a	n/a	10000		31269	10,48	---	---	?	?	?	?	?
F550 SUPER DUTY	4x2	Crew Cab	Yes	Chassis	n/a	n/a	n/a	10000		31269	10,48	---	---	?	?	?	?	?

Notes:

1. Ballast amounts are based on a "Representative Vehicle," defined in the vehicle selection guide instructions, and must be modified for all other configurations for axle and GVWR compliance.
10. May require bumper or air dam notching.
48. Snowplow prep package required until further notice.

2008 International

Section 2
PRO-PLOW®, PRO PLUS® & Heavy Weight Blades

	UltraMount®									UniMount®	
	PRO-PLOW®					PRO PLUS®				Heavy Weight	
	7'-6" STEEL	7'-6" POLY	8' STEEL	8' POLY	8'-6" STEEL	7'-6" STEEL	8' STEEL	8'-6" STEEL	9' STEEL	9' STEEL	10' STEEL
Plow	IUTP75	IUTPY75	IUTP80	IUTPY80	IUTP85	IUTPP75	IUTPP80	IUTPP85	IUTPP90	IUHW90	IUHW10
Blade Assembly	60381	62400	60390	62450	60308	64750	66980	66974	66901	62301	62302
AQ&L Assembly Box 1	67950					66490				62298-1	
AQ&L Assembly Box 2	67951-2									62299-1	
Hydraulic Kit	64588					64999				64400	
Light Kit	28800									28800 & 28340	
Choose a Module	DRLs: 29070, Non-DRLs: 29060									DRLs: 29070, Non-DRLs: 29060	
Choose a Joystick Control	56369									56369	
or Hand-Held Control	56462									56462	

Model		Body Style	DRW	Box Option	Engine Type	Min FGAWR	Min RGAWR	Min GVWR	Harness Kit	UltraMount® System		Ballast Guidelines, lbs (1)									UniMount® System		Ballast Guidelines, lbs (1)	
										Mount Kit	Notes										Mount Kit	Notes		
4000 SERIES	4x2	n/a	Yes	Chassis	n/a	n/a	n/a	10001	2B use 29053 & 29234 or HB5 use 29053 & 29235	n/a	---	---	---	---	---	---	---	---	---	---	62275	---	?	?
4000 SERIES (Low Pro)	4x2	n/a	Yes	Chassis	n/a	n/a	n/a	10001		n/a	---	---	---	---	---	---	---	---	---	---	62275	---	?	?

Notes:
1. Ballast amounts are based on a "Representative Vehicle," defined in the vehicle selection guide instructions, and must be modified for all other configurations for axle and GVWR compliance.

2008 Jeep

Section 1
Suburbanite™ & MIDWEIGHT™ Blades

	Suburbanite™		MIDWEIGHT™	
	6'-8" POLY	7'-4" POLY	7'-6" STEEL	7'-6" POLY
Plow	SUB68	SUB74	IUTM75	IUTMY75
Blade Assembly	27546	27548	64340	64330
AQ&L Assembly Box 1	27550		64336	
AQ&L Assembly Box 2	n/a		67992	
Hydraulic Kit	27516		64620	
Light Kit	64100		28800	
Choose a Module	DRLs: 29070, Non-DRLs: 29060		DRLs: 29070, Non-DRLs: 29060	
Choose a Joystick Control	56369		56369	
or Hand-Held Control	56462		56462	

Model		Body Style	DRW	Box Option	Engine Type	Min FGAWR	Min RGAWR	Min GVWR	Harness Kit	Personal Plow System		Ballast Guidelines, lbs (1)		UltraMount® System		Ballast Guidelines, lbs (1)	
										Mount Kit	Notes			Mount Kit	Notes		
LIBERTY SPORT	4x4	SU-4DR	No	---	3.7L V6	2750	3200	5600	H13 use 29049	3713-2	8	0	0	n/a	---	---	---
WRANGLER	4x4	SU-2DR	No	---	3.8L V6	2650	3000	4900		42113	8,49	0	0	n/a	---	---	---
WRANGLER UNLIMITED	4x4	SU-4DR	No	---	3.8L V6	2650	3000	4900		42113	8,49	0	0	n/a	---	---	---
GRAND CHEROKEE LAREDO	4x4	SU-4DR	No	---	3.7L V6	2950	3200	6100	HB3/HB4 use 29048 & 28027-2	42021	3,8	0	0	n/a	---	---	---
GRAND CHEROKEE LIMITED	4x4	SU-4DR	No	---	4.7L V8	2950	3200	6150		42021	3,8	0	0	n/a	---	---	---
GRAND CHEROKEE LIMITED	4x4	SU-4DR	No	---	5.7L V8	2950	3200	6150		42021	3,8	0	0	n/a	---	---	---

Notes:

1. Ballast amounts are based on a "Representative Vehicle," defined in the vehicle selection guide instructions, and must be modified for all other configurations for axle and GVWR compliance.
3. Requires bumper notching.
8. These Snowplows Are For Personal/Homeowner Use Only.
49. Not for use on Rubicon or other models equiped with Smartbar™.

2008 Mitsubishi

Section 2
PRO-PLOW®, PRO PLUS® & Heavy Weight Blades

	UltraMount									UniMount
	PRO-PLOW®					PRO PLUS®				Heavy Weight
	7'-6" STEEL	7'-6" POLY	8' STEEL	8' POLY	8'-6" STEEL	7'-6" STEEL	8' STEEL	8'-6" STEEL	9' STEEL	9' STEEL / 10' STEEL
Plow	IUTP75	IUTPY75	IUTP80	IUTPY80	IUTP85	IUTPP75	IUTPP80	IUTPP85	IUTPP90	IUHW90 / IUHW10
Blade Assembly	60381	62400	60390	62450	60308	64750	66980	66974	66901	62301 / 62302
AQ&L Assembly Box 1	67950					66490				62298-1
AQ&L Assembly Box 2	67951-2									62299-1
Hydraulic Kit	64588					64999				64400
Light Kit	28800									28800 & 28340
Choose a Module	DRLs: 29070, Non-DRLs: 29060									DRLs: 29070, Non-DRLs: 29060
Choose a Joystick Control	56369									56369
or Hand-Held Control	56462									56462

Model		Body Style	DRW	Box Option	Engine Type	Min FGAWR	Min RGAWR	Min GVWR	Harness Kit	UltraMount® System		Ballast Guidelines, lbs (1)									UniMount® System		Ballast Guidelines, lbs (1)	
										Mount Kit	Notes										Mount Kit	Notes		
FG	4x4	n/a	Yes	Chassis	n/a	n/a	n/a	10001	HB5 use 29050 & 28860-1	33109	---	---	---	---	---	?	---	---	?	?	n/a	---	---	---

Notes:
1. Ballast amounts are based on a "Representative Vehicle," defined in the vehicle selection guide instructions, and must be modified for all other configurations for axle and GVWR compliance.

2008 Mitsubishi

Section 3
MVP PLUS™ & WIDE-OUT™ Blades

	UltraMount®						
	MVP PLUS™						WIDE-OUT™
	7'-6" STEEL	7'-6" POLY	8'-6" STEEL	8'-6" POLY	9'-6" STEEL	9'-6" POLY	8'–10' STEEL
Plow	IUTMVPP75	IUTMVPPY75	IUTMVPP85	IUTMVPPY85	IUTMVPP95	IUTMVPPY95	IUTWO810
Blade Assembly	44475-1	44575-1	44485-1	44585-1	44495-1	44595-1	51810
AQ&L Assembly Box 1	44225-1						51225
AQ&L Assembly Box 2	n/a						
Hydraulic Kit	n/a						
Light Kit	n/a						
Choose a Module	DRLs: 29070, Non-DRLs: 29060						
Choose a Joystick Control	96400						n/a
or Hand-Held Control	96500						

Model		Body Style	DRW	Box Option	Engine Type	Min FGAWR	Min RGAWR	Min GVWR	Harness Kit	UltraMount® System		Ballast Guidelines, lbs (1)						
										Mount Kit	Notes							
FG	4x4	n/a	Yes	Chassis	n/a	n/a	n/a	10001	HB5 use 29050 & 28860-1	33109	---	---	---	?	?	---	---	---

Notes:
1. Ballast amounts are based on a "Representative Vehicle," defined in the vehicle selection guide instructions, and must be modified for all other configurations for axle and GVWR compliance.

2008 Nissan

Section 1
Suburbanite™ & MIDWEIGHT™ Blades

	Suburbanite™		MIDWEIGHT™	
	6'-8" POLY	7'-4" POLY	7'-6" STEEL	7'-6" POLY
Plow	SUB68	SUB74	IUTM75	IUTMY75
Blade Assembly	27546	27548	64340	64330
AQ&L Assembly Box 1	27550		64336	
AQ&L Assembly Box 2	n/a		67992	
Hydraulic Kit	27516		64620	
Light Kit	64100		28800	
Choose a Module	DRLs: 29070, Non-DRLs: 29060		DRLs: 29070, Non-DRLs: 29060	
Choose a Joystick Control	56369		56369	
or Hand-Held Control	56462		56462	

Model		Body Style	DRW	Box Option	Engine Type	Min FGAWR	Min RGAWR	Min GVWR	Harness Kit	Personal Plow System		Ballast Guidelines, lbs (1)		UltraMount® System		Ballast Guidelines, lbs (1)	
										Mount Kit	Notes			Mount Kit	Notes		
TITAN XE	4x4	King Cab	No	6.5 Box	5.6L V8	3577	3800	6522	HB3/HB4 use 29048 & 28027-2	31303	8,40	---	0	n/a	---	---	---
TITAN XE	4x4	King Cab	No	8.0 Box	5.6L V8	3577	3800	6522		31303	8,40	---	0	n/a	---	---	---
TITAN XE	4x4	Crew Cab	No	5.5 Box	5.6L V8	3577	3800	6522		31303	8,40	---	0	n/a	---	---	---
TITAN XE	4x4	Crew Cab	No	7.0 Box	5.6L V8	3577	3800	6522		31303	8,40	---	0	n/a	---	---	---
TITAN SE	4x4	King Cab	No	6.5 Box	5.6L V8	3577	3800	6522		31303	8,40	---	0	n/a	---	---	---
TITAN SE	4x4	King Cab	No	8.0 Box	5.6L V8	3577	3800	6522		31303	8,40	---	0	n/a	---	---	---
TITAN SE	4x4	Crew Cab	No	5.5 Box	5.6L V8	3577	3800	6522		31303	8,40	---	0	n/a	---	---	---
TITAN SE	4x4	Crew Cab	No	7.0 Box	5.6L V8	3577	3800	6522		31303	8,40	---	0	n/a	---	---	---
TITAN LE	4x4	King Cab	No	6.5 Box	5.6L V8	3577	3800	6522		31303	8,40	---	0	n/a	---	---	---
TITAN LE	4x4	King Cab	No	8.0 Box	5.6L V8	3577	3800	6522		31303	8,40	---	0	n/a	---	---	---
TITAN LE	4x4	Crew Cab	No	5.5 Box	5.6L V8	3577	3800	6522		31303	8,40	---	90	n/a	---	---	---
TITAN LE	4x4	Crew Cab	No	7.0 Box	5.6L V8	3577	3800	6522		31303	8,40	---	120	n/a	---	---	---
FRONTIER	4x4	King Cab	No	6.1 Box	4.0L V6	3296	3265	5600	HB5 use 29050	31313	8	0	0	n/a	---	---	---
FRONTIER	4x4	Crew Cab	No	5.0 Box	4.0L V6	3296	3265	5600		31313	8	0	0	n/a	---	---	---

Notes:

1. Ballast amounts are based on a "Representative Vehicle," defined in the vehicle selection guide instructions, and must be modified for all other configurations for axle and GVWR compliance.
8. These Snowplows Are For Personal/Homeowner Use Only.
40. Removal of skid plate or splash guard required.

2008 Toyota

Section 1
Suburbanite™ & MIDWEIGHT™ Blades

	Suburbanite™		MIDWEIGHT™	
	6'-8" POLY	7'-4" POLY	7'-6" STEEL	7'-6" POLY
Plow	SUB68	SUB74	IUTM75	IUTMY75
Blade Assembly	27546	27548	64340	64330
AQ&L Assembly Box 1	27550		64336	
AQ&L Assembly Box 2	n/a		67992	
Hydraulic Kit	27516		64620	
Light Kit	64100		28800	
Choose a Module	DRLs: 29070, Non-DRLs: 29060		DRLs: 29070, Non-DRLs: 29060	
Choose a Joystick Control	56369		56369	
or Hand-Held Control	56462		56462	

Model		Body Style	DRW	Box Option	Engine Type	Min FGAWR	Min RGAWR	Min GVWR	Harness Kit	Personal Plow System		Ballast Guidelines, lbs (1)		UltraMount® System		Ballast Guidelines, lbs (1)	
										Mount Kit	Notes			Mount Kit	Notes		
TACOMA	4x4	Reg Cab	No	6.1 Box	2.7L I4	2755	3110	5100	HB2 use 29051	32323	8	0	0	n/a	---	---	---
TACOMA	4x4	Access Cab	No	6.1 Box	2.7L I4	2755	3110	5350		32323	8	0	10	n/a	---	---	---
TACOMA	4x4	Access Cab	No	6.1 Box	4.0L V6	2755	3110	5350		32323	8	90	200	n/a	---	---	---
TACOMA	4x4	Double Cab	No	5.0 Box	4.0L V6	2755	3110	5450		32323	8	300	410	n/a	---	---	---
TACOMA	4x4	Double Cab	No	6.1 Box	4.0L V6	2755	3110	5450		32323	8	480	600	n/a	---	---	---
TUNDRA DX	4x4	Reg Cab	No	6.5 Box	4.7L V8	4000	4050	6800	HB3/H11 US use 29400-2 or HB3/H11 Canada use 29400-2	32333	8	---	0	31139	---	160	150
TUNDRA DX	4x4	Reg Cab	No	6.5 Box	5.7L V8	4000	4050	6800		32333	8	---	0	31139	---	150	150
TUNDRA DX	4x4	Reg Cab	No	8.0 Box	4.7L V8	4000	4150	7000		32333	8	---	0	31139	---	200	200
TUNDRA DX	4x4	Reg Cab	No	8.0 Box	5.7L V8	4000	4150	7200		32333	8	---	0	31139	---	230	180
TUNDRA SR5	4x4	Reg Cab	No	6.5 Box	4.7L V8	4000	4050	6800		32333	8	---	0	31139	---	160	150
TUNDRA SR5	4x4	Reg Cab	No	6.5 Box	5.7L V8	4000	4050	6800		32333	8	---	0	31139	---	150	150
TUNDRA SR5	4x4	Reg Cab	No	8.0 Box	4.7L V8	4000	4150	7000		32333	8	---	0	31139	---	200	200
TUNDRA SR5	4x4	Reg Cab	No	8.0 Box	5.7L V8	4000	4150	7200		32333	8	---	0	31139	---	230	180
TUNDRA SR5	4x4	Double Cab	No	6.5 Box	4.7L V8	4000	4100	6900		32333	8	---	0	31139	---	---	---
TUNDRA SR5	4x4	Double Cab	No	6.5 Box	5.7L V8	4000	4150	7100		32333	8	---	0	31139	---	---	---
TUNDRA SR5	4x4	Double Cab	No	8.0 Box	4.7L V8	4000	4150	7000		32333	8	---	0	31139	---	---	---
TUNDRA SR5	4x4	Double Cab	No	8.0 Box	5.7L V8	4000	4150	7200		32333	8	---	0	31139	---	---	---
TUNDRA SR5	4x4	Crew Max	No	5.5 Box	4.7L V8	4000	4150	7000		32333	8	---	0	31139	---	---	---
TUNDRA SR5	4x4	Crew Max	No	5.5 Box	5.7L V8	4000	4150	7200		32333	8	---	0	31139	---	---	---
TUNDRA LIMITED	4x4	Double Cab	No	6.5 Box	4.7L V8	4000	4100	6900		32333	8	---	0	31139	---	---	---
TUNDRA LIMITED	4x4	Double Cab	No	6.5 Box	5.7L V8	4000	4150	7100		32333	8	---	0	31139	---	---	---
TUNDRA LIMITED	4x4	Crew Max	No	5.5 Box	4.7L V8	4000	4150	7000		32333	8	---	0	31139	---	---	---
TUNDRA LIMITED	4x4	Crew Max	No	5.5 Box	5.7L V8	4000	4150	7200		32333	8	---	0	31139	---	---	---

Notes:

1. Ballast amounts are based on a "Representative Vehicle," defined in the vehicle selection guide instructions, and must be modified for all other configurations for axle and GVWR compliance.
8. These Snowplows Are For Personal/Homeowner Use Only.

2008 Toyota

Section 2
PRO-PLOW®, PRO PLUS® & Heavy Weight Blades

	UltraMount									UniMount
	PRO-PLOW®					PRO PLUS®				Heavy Weight
	7'-6" STEEL	7'-6" POLY	8' STEEL	8' POLY	8'-6" STEEL	7'-6" STEEL	8' STEEL	8'-6" STEEL	9' STEEL	9' STEEL / 10' STEEL
Plow	IUTP75	IUTPY75	IUTP80	IUTPY80	IUTP85	IUTPP75	IUTPP80	IUTPP85	IUTPP90	IUHW90 / IUHW10
Blade Assembly	60381	62400	60390	62450	60308	64750	66980	66974	66901	62301 / 62302
AQ&L Assembly Box 1	67950					66490				62298-1
AQ&L Assembly Box 2	67951-2									62299-1
Hydraulic Kit	64588					64999				64400
Light Kit	28800									28800 & 28340
Choose a Module	DRLs: 29070, Non-DRLs: 29060									DRLs: 29070, Non-DRLs: 29060
Choose a Joystick Control	56369									56369
or Hand-Held Control	56462									56462

Model		Body Style	DRW	Box Option	Engine Type	Min FGAWR	Min RGAWR	Min GVWR	Harness Kit	UltraMount® System Mount Kit	UltraMount® System Notes	Ballast Guidelines, lbs (1)									UniMount® System Mount Kit	UniMount® System Notes	Ballast Guidelines, lbs (1)	
TUNDRA DX	4x4	Reg Cab	No	6.5 Box	4.7L V8	4000	4050	6800	HB3/H11 US use 29400-2 or HB3/H11 Canada use 29400-2	31139	---	520	---	---	---	---	---	---	---	---	n/a	---	---	---
TUNDRA SR5	4x4	Reg Cab	No	6.5 Box	4.7L V8	4000	4050	6800		31139	---	520	---	---	---	---	---	---	---	---	n/a	---	---	---

Notes:
1. Ballast amounts are based on a "Representative Vehicle," defined in the vehicle selection guide instructions, and must be modified for all other configurations for axle and GVWR compliance.

HEADLAMP TYPE IDENTIFICATION GUIDE

NOTE: The lamp type is usually embossed in the headlamp lens.

1A/2A

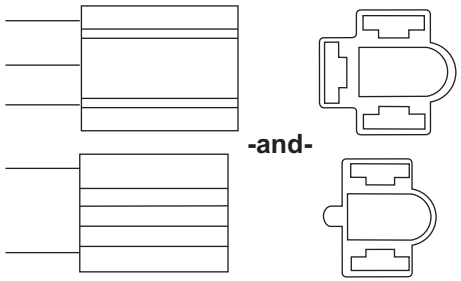

Bulb Type: 1A1: H4651
2A1: H4652 (General Motors)
H4656 (Mitsubishi)

2B/2D & HB-2

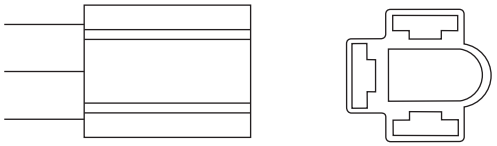

Bulb Type: 2B1: H6054
2D1: H6024
HB-2: 9003

2E

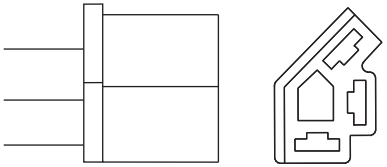

Bulb Type: H6545

H11

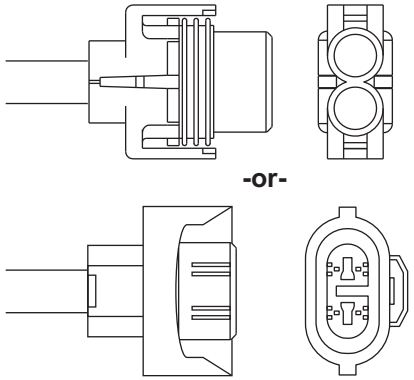

Bulb Type: H11

H13

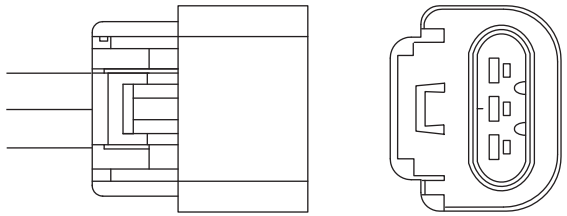

Bulb Type: 9008

HB-1 & HB-5

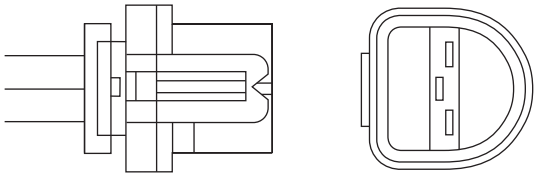

Bulb Type: HB-1: 9004
HB-5: 9007

HB-3

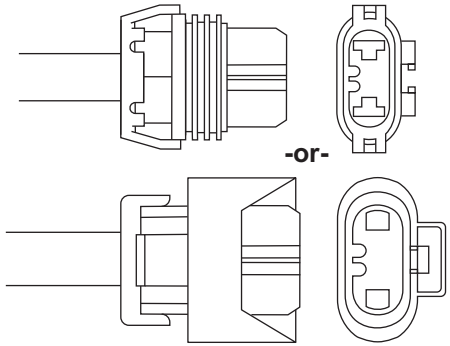

Bulb Type: 9005

HB-4

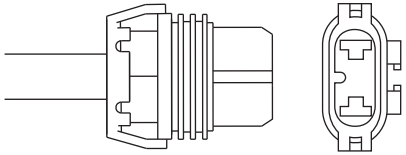

Bulb Type: 9006

LF / UF

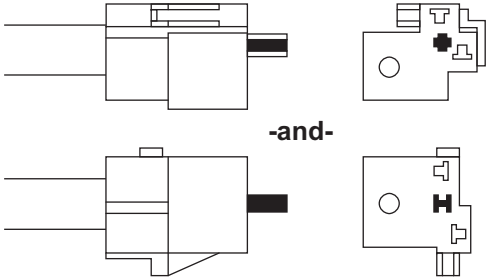

Bulb Type: LF: H4703
UF: H4701

4-PORT TO 3-PORT CONVERSION CHART

A new 3-Port Isolation Module is being offered this season. This new Isolation Module requires different harnesses and adapters than the current 4-Port Isolation Module.

To order a 3-Port Isolation Module electrical system instead of a 4-Port system, look up your vehicle in the Selection List as usual. Then, look under the 4-Port heading in the following chart and find the Harness Kit(s) *exactly as they are shown in the Selection List for your vehicle*. Order the PN(s) listed under the 3-Port heading in place of those under the 4-Port heading if a 3-Port Isolation Module system is desired.

NOTE: For 3-Port Isolation Module systems, you must order an Isolation Module in addition to the harness and adapter kit(s). For DRLs, order PN 29070; for Non-DRLs, order PN 29060.

4-Port Harness Kit(s)	3-Port Harness Kit(s)
If the Selection List shows this for your vehicle…	**You could order this instead…**
2B use 27890 or 1A/2A use 27890	2B use 29053 or 1A/2A use 29053
2B use 8439	2B use 29051
2B use 8439 & 26640	2B use 29053 & 29234
2B use 8439 & 26640 or HB-5 use 8436 & 26640	2B use 29053 & 29234 or HB-5 use 29053 & 29235
2B use 8439 or 1A/2A use 8436 & 26641	2B use 29051 or 1A/2A use 29050 & 26641-1
2B use 8439 or HB-1 use 8436	2B use 29051 or HB-1 use 29050
2B use 8439 or HB-3/HB-4 use 8438	2B use 29051 or HB-3/HB-4 use 29048
2B use 8439 or HB-3/HB-4 use 8438 or LF/UF n/a	2B use 29051 or HB-3/HB-4 use 29048 or LF/UF n/a
2B use 8439 or HB-3/HB-4 use 8440	2B use 29051 or HB-3/HB-4 use 29048
2B use 8439 or HB-5 use 8436	2B use 29051 or HB-5 use 29050
2B use 8439 or LF/UF n/a	2B use 29051 or LF/UF n/a
2B use 8439 or LF/UF n/a or 1A/2A use 8436 & 26641	2B use 29051 or LF/UF n/a or 1A/2A use 29050 &26641-1
2B/2D use 8439 & 26640	2B/2D use 29053 & 29234
2B/2D use 8439 or 1A/2A use 8436 & 26641	2B/2D use 29051 or 1A/2A use 29050 & 26641-1
2B/2D use 8443	2B/2D use 29054
2B1 use 8439 & 26640	2B1 use 29053 & 29234
2D use 8439	2D use 29051
2E use 8439 & 27968 or HB-1 use 8436	2E use 29051 & 27968-1 or HB-1 use 29050
2E use 8439 & 27968 or HB-3/HB-4 use 8438	2E use 29051 & 27968-1 or HB-3/HB-4 use 29048
H13 use 28400	H13 use 29049
H13 use 28400 or 2B use 28400	H13 use 29049 or 2B use 29049
H13 use 28400 or 2B use 8439	H13 use 29049 or 2B use 29051
HB-1 use 8436	HB-1 use 29050
HB-1 use 8436 or HB-5/HB-1 use 8442	HB-1 use 29050 or HB-5/HB-1 use 29050 & 29056-1
HB-2 use 8439	HB-2 use 29051
HB-3/H11 US use 28400 & 29420-1 & 28027 or HB-3/H11 Canada use 28400 & 29420-1 & 28027	HB-3/H11 US use 29400-2 & 28027-2 or HB-3/H11 Canada use 29400-2 & 28027-2
HB-3/H11 use 27780 & 29458 & 28027 or H13 use 28400	HB-3/H11 use 29400-2 & 28027-2 or H13 use 29049
HB-3/H11 use 28400 & 29420 & 28027	HB-3/H11 use 29400-2 & 28027-2
HB-3/HB-4 US use 27480-1 or HB-3/HB-4 Canada use 8437-1 & 28555	HB-3/HB-4 US use 29048 or HB-3/HB-4 Canada use 29048
HB-3/HB-4 use 27480-1	HB-3/HB-4 use 29048
HB-3/HB-4 use 27480-1 & 28027	HB-3/HB-4 use 29048 & 28027-2
HB-3/HB-4 use 27780	HB-3/HB-4 use 29048
HB-3/HB-4 use 28028	HB-3/HB-4 use 29052
HB-3/HB-4 use 8437-1	HB-3/HB-4 use 29048
HB-3/HB-4 use 8438 & 28027	HB-3/HB-4 use 29048 & 28027-2
HB-5 use 8436	HB-5 use 29050
HB-5 use 8436 & 26641	HB-5 use 29050 & 26641-1
HB-5 use 8436 & 28860	HB-5 use 29050 & 28860-1

WEIGHT AND DIMENSIONAL CHARTS

Plows and Accessories Information											
Plows		Accessories – Part Number (Effective Added Weight in lb)									Var.
Size	Wt. (lb)	HD Poly Deflector	Rubber Deflector	Cutting Edge 1/2"	Back Drag Edge	Wing Kit	Shoes	Blade Stops	Curb Guard	Dolly Wheel	Z (in)
SUB68	239	––	––	––	––	––	27710 (5.7)	––	––	––	20.4
SUB74	257	––	––	––	––	––	27710 (5.7)	––	––	––	20.8
IUTM75	540	63700 (19.1)	62123 (29.6)	––	64758 (47.0)	––	64392 (21.1)	––	44404 (61.3)	––	20.4
IUTMY75	532	63700 (19.1)	62123 (29.6)	––	64758 (47.0)	––	64392 (21.1)	––	44404 (61.6)	––	20.3
IUTP75	682	63700 (19.2)	62123 (29.7)	49346 (25.8)	64758 (47.0)	––	––	––	44403 (63.8)	––	20.8
IUTPY75	719	––	––	49350 (24.8)	64758 (47.0)	––	––	––	44403 (58.4)	––	22.7
IUTP80	699	63670 (20.1)	62530 (33.8)	49347 (27.4)	66892 (60.6)	––	––	––	44403 (62.3)	––	21.3
IUTPY80	727	––	––	49351 (26.9)	66892 (60.6)	––	––	––	44403 (59.0)	––	22.5
IUTP85	715	63670 (21.1)	62220 (35.5)	49348 (28.8)	66999 (63.5)	––	––	––	44403 (61.7)	––	21.5
IUTPP75	789	63700 (12.4)	62123 (28.9)	––	64758 (59.7)	64410 (90.0)	––	––	44404 (41.2)	––	26.1
IUTPP80	805	63670 (13.3)	62530 (32.2)	––	66892 (63.2)	64410 (90.0)	––	––	44404 (40.7)	––	26.4
IUTPP85	821	63670 (14.2)	62220 (35.5)	––	66999 (66.2)	64410 (90.0)	––	––	44404 (40.3)	––	26.7
IUTPP90	837	63670 (15.0)	62220 (37.1)	––	66991 (69.2)	64410 (90.0)	––	––	44404 (39.8)	––	27.0
IUTMVPP75	827	––	44280 (55.5)	44284-1 (36.6)	44281-2 (49.1)	––	44277 (43.2)	44473 (21.4)	44404 (25.2)	––	18.4
IUTMVPPY75	799	––	44280 (55.5)	44284-1 (36.6)	44281-2 (49.1)	––	44277 (43.2)	44473 (21.4)	44404 (25.5)	––	18.4
IUTMVPP85	880	––	44280 (61.8)	44285-1 (40.0)	44282-2 (54.7)	44510-1 (91.8)	44277 (32.0)	44473 (21.5)	44404 (24.0)	––	18.3
IUTMVPPY85	847	––	44280 (61.8)	44285-1 (40.0)	44282-2 (54.7)	44510-1 (91.8)	44277 (32.0)	44473 (21.5)	44404 (24.1)	––	18.3
IUTMVPP95	1006	––	44280 (68.7)	––	44283-2 (57.3)	44510-1 (76.1)	44277 (26.7)	44473 (20.9)	44404 (22.8)	––	18.8
IUTMVPPY95	964	––	44280 (68.7)	––	44283-2 (57.3)	44510-1 (76.1)	44277 (26.7)	44473 (20.9)	44404 (23.5)	––	18.8
IUTWO810	940	––	52280 (83.0)	––	52278 (52.9)	––	44277 (39.4)	––	––	––	27.8
IUHW90	1048	––	62220 (37.8)	––	––	––	––	––	44404 (33.7)	62430 (24.8)	33.0
IUHW10	1106	––	62124 (45.8)	––	––	––	––	––	44404 (33.1)	62430 (24.8)	33.6
––	––	UltraMount to UniMount Conversion Kit 27170 ( )									Varies

Mount Information							
Mount	Weight (lb)	X (in)	Y (in)	Mount	Weight (lb)	X (in)	Y (in)
Suburbanite™ Mounts							
1203	34.0	27.0	6.0	31243	36.0	28.0	6.5
1213-1	23.0	26.0	6.0	31303	43.0	27.9	4.8
1223	40.0	28.0	7.0	31313	38.0	25.0	5.0
1233	34.0	32.0	7.1	31543-1	20.0	28.5	7.1
1503	26.0	27.0	6.0	31553	34.0	32.0	5.5
1523	26.0	30.0	6.0	32323	36.0	30.0	7.3
1533-1	31.0	26.0	5.0	32333	40.0	30.0	6.0
2303	41.0	29.0	6.0	33903	45.0	31.0	7.8
2313	30.0	27.0	5.0	33913	49.0	40.0	4.0
3713-2	20.0	26.0	5.0	42021	37.0	29.0	8.0
3723	35.0	21.4	5.0	42113	29	23.5	5.5
UniMount® and UltraMount® Mounts							
1369	80.0	32.9	8.3	62275	Varies		
1379	83.0	32.9	8.3	63710-1	87.0	27.8	5.7
3249	65.0	30.4	9.8	63760	40.0	30.0	8.0
3919	47.0	30.1	8.5	63883-2	47.0	37.0	6.9
30999	40.0	33.5	8.0	63900	87.0	29.6	12.5
31139	33.0	29.0	8.0	64110	115.0	38.0	10.0
31269	65.0	35.0	10.4	64500	33.0	32.5	8.9
31599	42.0	38.4	8.5	67810	44.0	35.1	8.7
33109	110.0	38.0	7.0	67865	41.0	31.3	7.6
33259	43.0	33.5	10.8	67960-1	34.0	29.1	7.6
33559	115.0	38.0	10.0	67980	51.0	35.0	8.5
33929	39.0	32.5	8.1	67981-2	54.0	32.4	11.4
33939	75.0	36.0	6.0	67982	69.0	30.4	9.0

NOTE: The addition of accessories to a snowplow or vehicle will require additional ballast above any amount published in this guide in order to maintain FMVSS compliance. Completed vehicle with additional accessories shall not exceed GVWR or GAWR.

NOTE: An abbreviation key is on page 2.

NOTE: See next page for variable definitions.

DIMENSIONAL DIAGRAM

Variables:

X = Distance from center of front axle to receiver pin.

Y = Distance from receiver pin to CG of mount.

Z = Distance from receiver pin to CG of snowplow.

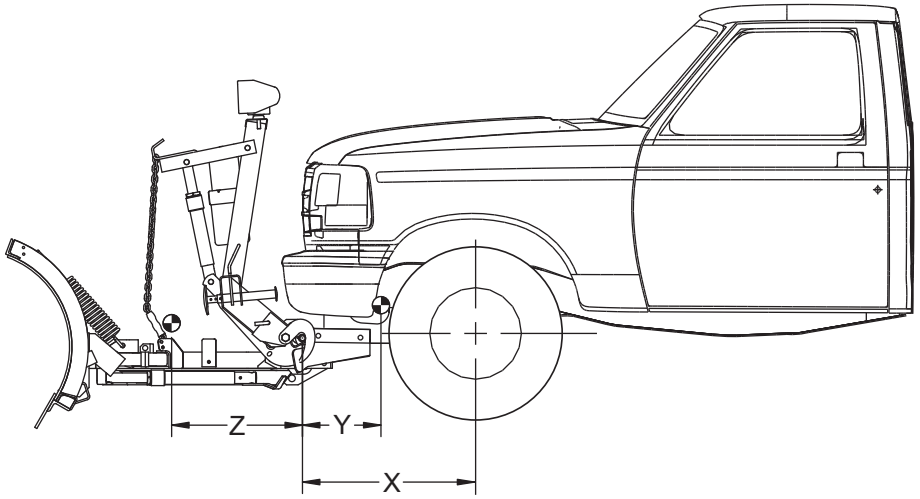

Example: Weight that one would use if they had an IUTP75 with the poly deflector and a 1/2" cutting edge.

The weight of the snowplow alone with no accessories would be 682 lb with its center of gravity 20.8 in from the coupling point. To add the weight of the accessories, look in the row with the IUTP75 blade to find the effective poly deflector weight of 19.2 lb and the effective cutting edge weight of 25.8 lb.

The total weight of the blade and accessories will be:

682.0	
19.2	
+ 25.8	
727.0	with its center of gravity still at 20.8 in from the coupling point

ALWAYS comply with the vehicle manufacturer's stated gross vehicle and axle weight ratings (found on the driver-side door jamb of the vehicle) and front and rear weight distribution ratio with the snowplow installed. In some cases, rear ballast may be required to achieve these requirements.

Available vehicle capacities for aftermarket equipment and components can be determined by using the above information along with information provided by the vehicle manufacturer's Body Builder Guides. Follow all requirements and recommendations as stated by vehicle manufacturer.

NOTE: An abbreviation key is on page 2.

VEHICLE AND PLOW APPLICATION INQUIRY SHEET

Western Products
7777 North 73rd Street
Milwaukee, WI 53223

Telephone (414) 354-2310
Fax (414) 354-6664

DISTRIBUTOR		**TEL**	
		FAX	

CUSTOMER	
VIN	**DATE BUILT**

SELECT MOUNT TYPE	☐ UniMount®	☐ UltraMount®	☐ Conversion Kit
	☐ Suburbanite™		

VEHICLE INFORMATION

YEAR					
MAKE					
MODEL					
DRIVE TRAIN	☐ 4x2 (over 10,000 lb. GVW only)	☐ 4x4	☐ ALL WHEEL	☐ OTHER	
DRW (Dual Rear Wheels)	☐ YES	☐ NO			
BODY STYLE	☐ REG CAB	☐ EXT CAB	☐ OTHER		
BOX OPTION (S)	☐ DUMP BOX	☐ STAKE BED	☐ OTHER		
ENGINE TYPE					
GFAWR					
GRAWR					
GVWR					

HORIZONTAL DISTANCE DESCRIPTION

L31	**DRIVERS hip point; in MIDDLE position, to Centerline of FRONT axle**	**(in.)**
L101	**Between axles (Wheelbase)**	**(in.)**
L104	**Middle of FRONT bumper to centerline of FRONT axle**	**(in.)**
	Middle of ballast location to centerline of REAR axle	**(in.)**

VEHICLE WEIGHT (TRUCK MUST BE WEIGHED COMPLETE AND EMPTY (-) OCCUPANTS, PLOW & MOUNT)

FRONT (lb.)	REAR (lb.)

FUEL TANKS (ONLY NEEDED IF WEIGHED VEHICLE NOT FULLY FUELED)

	LEVEL (see below)	CAPACITY (gal.)	LOCATION FROM AXLE TO CENTER OF TANK(in.)
FRONT OF AXLE			
REAR OF AXLE			

FUEL LEVEL (EMPTY = 0, HALF = 1/2, FULL = 1)

THIS FORM *MUST* BE COMPLETED IN ITS ENTIRETY. ANY FORMS CONTAINING INCOMPLETE INFORMATION *WILL NOT BE CONSIDERED*. PLEASE RETURN VIA FAX (414) 354-6664.

Western Products or the vehicle manufacturer may require or recommend optional equipment for snow removal.
See the WESTERN® *Selection List* for additional product information.

UltraMount® SYSTEM TO UniMount® SYSTEM CONVERSION KIT (PN 27170)

⚠ WARNING

Conversion kit use is limited to vehicles up to 19,500 lb GVWR.

⚠ WARNING

Do not exceed GVWR or GAWR, including blade and ballast. The rating label is found on the driver-side vehicle door cornerpost.

This easy to use UltraMount system to UniMount system conversion kit enables you to attach a UniMount snowplow to a vehicle equipped with an UltraMount mount.

Simply remove the receivers from your UltraMount system mount, and pin the conversion plate in plate. This accessory is perfect for customers with multiple snowplows, providing their fleet with versatility while changing to the UltraMount system.

This new kit is also ideal for transferring an old UniMount snowplow to a new truck. As new trucks are released, we will develop only new UltraMount mounts for these snowplow applications. This will allow the customer to transfer an existing UniMount snowplow to the late model vehicle. In addition, when customers are ready to replace their old UniMount snowplow, the truck will already have the mount and wiring for an UltraMount snowplow.

TO QUALIFY THE VEHICLE AND DETERMINE BALLAST, YOU MUST FILL OUT THE VEHICLE AND SNOWPLOW APPLICATION INQUIRY SHEET.

NOTE: When ballast is required, it should be secured behind the rear wheels in a manner which prevents it from sliding during normal driving. Western Products offers an options ballast retainer kit (PN 62849) for this purpose.

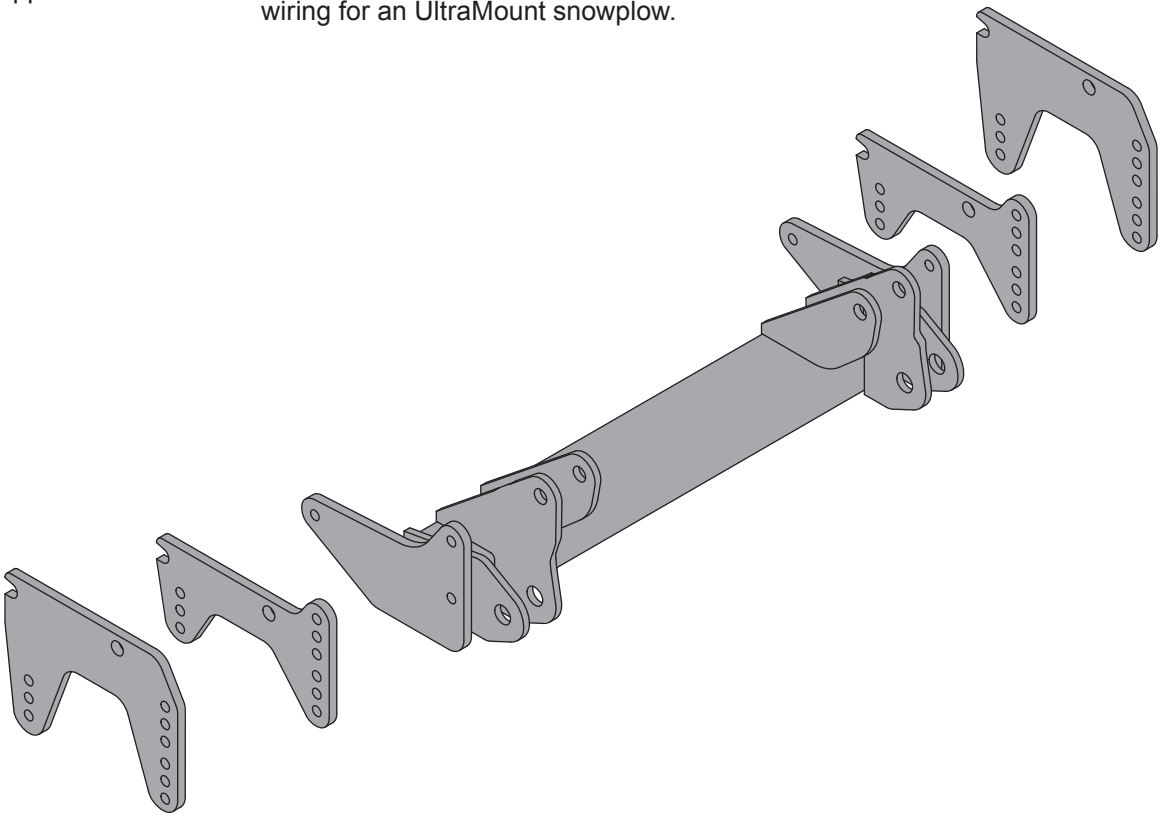

NOTES:

Western Products
PO Box 245038
Milwaukee, WI 53224-9538
www.westernplows.com

A DIVISION OF DOUGLAS DYNAMICS, L.L.C.

Western Products reserves the right under its product improvement policy to change construction or design details and furnish equipment when so altered without reference to illustrations or specifications used. Western Products or the vehicle manufacturer may require or recommend optional equipment for snow removal. Do not exceed vehicle ratings with a snowplow. Western Products offers a limited warranty for all snowplows and accessories. See separately printed page for this important information. The following are registered (®) or unregistered (™) trademarks of Douglas Dynamics, L.L.C.: MIDWEIGHT™, MVP®, MVP PLUS™, POLY PRO-PLOW®, PRO-PLOW®, PRO PLUS®, Suburbanite™, UltraMount®, UniMount®, WESTERN®, WIDE-OUT™.

Printed in U.S.A.