WESTERN PRODUCTS
7777 NORTH 73RD STREET
P.O. BOX 23045
MILWAUKEE, WISCONSIN 53223

A DIVISION OF DOUGLAS DYNAMICS, L.L.C.

Vehicle Installation Instructions and Parts List
Model 1265
Mount Assembly Box No. 61800
Ford Bronco 4 x 4 & F-250 2WD
1992 & 1993
Hydraulics Box No. 56365
Harness Kit No. 61590
January 2, 1997

Refer to the current selection list for minimum vehicle recommendations and ballast requirements.

NOTE: This symbol designates a change made in the instructions since the last revision date of June 1, 1992.

Mount Assembly Box No. 61800 PARTS DIAGRAM & LIST

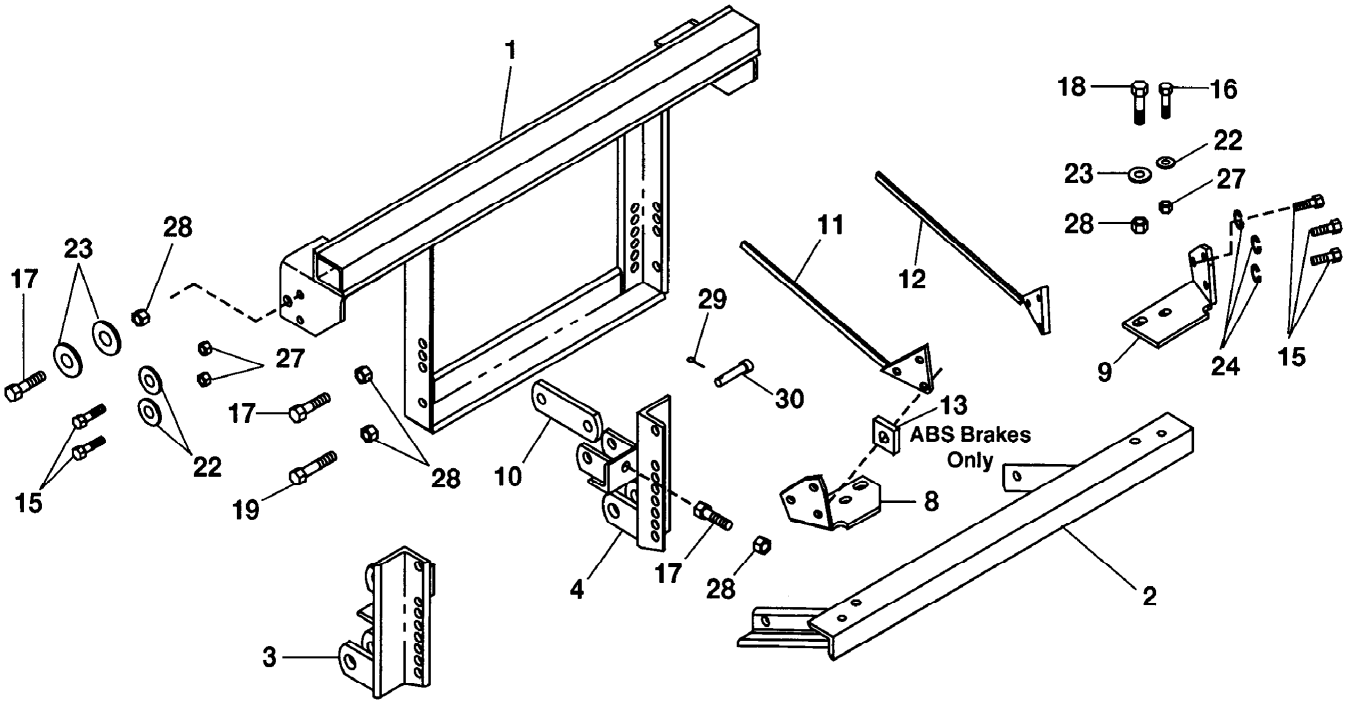

ITEM	PART NO.	QTY.	DESCRIPTION
1	61805	1	MOUNT FRAME 1265, 1275, 1295
2	61850	1	THRUST FRAME
3	61390	1	SPREADER DR
4	61391	1	SPREADER CU
8	61856	1	MOUNT BAR DR
9	61857	1	MOUNT BAR CU
10	61412	2	LINK ARM
11	61648	1	NUT BAR DR
12	61649	1	NUT BAR CU
13	61874	1	SPACER (Used on ABS Brakes Only)
15	90100	10	1/2-13X1-1/2 HX CS G5 ZYC
16	90101	2	1/2-13X1-3/4 HX CS G5 ZP
17	90128	6	5/8-11X1-3/4 HX CS G5 ZP
18	90129	2	5/8-11X2 HX CS G5 ZP
19	90130	2	5/8-11X2-1/4 HX CS G5 ZP
22	91105	6	1/2 PLAIN WASHER TY A STD ZYC
23	91106	6	5/8 PLAIN WASHER TY A STD ZP
24	91205	6	1/2 SP LK WASHER ZYC
27	91335	6	1/2-13 PT HX LK NUT NYIS ZYC
28	91337	10	5/8-11 PT HX LK NUT NYIS ZYC
29	91911	2	5/32X1-1/2 COTTER PIN ZYC
30	93062	2	RIVET 3/4" X 3-1/4" G5 ZYC

ITEM	PART NO.	QTY.	DESCRIPTION
Not Shown			
	56080	1	DASH BRACKET
	61536	4	CABLE TIE - LONG
	62313	2	5/8 ID X 3"LG CONVOLUTED TUBE
Parts listed above may be found in the following assembly			
	61858	1	BOLT BAG ASSY (61800)

Abbreviations

ASSY	Assembly
CS	Cap Screw
CU	Curb-Side
DR	Driver-Side
G	Grade
HX	Hex
ID	Inside Diameter
LG	Long
LK	Lock
NYIS	Nylon Insert
PT	Prevailing Torque
SP	Spring
STD	Standard
TY	Type
ZP	Zin c Plate
ZYC	Zinc Yellow Chromate

This product is manufactured under the following patents: 4,280,062, 5,240,480, 5,125,174, and 4,999,935. The following are registered® and unregistered™ trademarks of Douglas Dynamics, L.L.C.: WESTERN®, ISARMATIC®, Hydra-Turn®, UniMount®, Roll-Action™ and PRO-GUARD™ Western Products reserves the right under its Product Improvement Policy to change construction details and furnish equipment when so altered without reference to illustrations or specifications used herein.

Recommended Fastener Torque Chart (Ft.-Lb.)			
Size	SAE Grade 2	SAE Grade 5	SAE Grade 8
1/4-20	6	9	13
5/16-18	11	18	28
3/8-16	19	31	46
3/8-24	24	46	68
7/16-14	30	50	75
1/2-13	45	75	115
9/16-12	66	110	165
5/8-11	93	150	225
3/4-10	150	250	370
7/8-9	202	378	591
1-8	300	583	893
Metric Grade 8.8 (Ft.-Lb.)			
Size	Torque	Size	Torque
M 6	7	M 12	60
M 8	17	M 14	95
M 10	35	M 16	155
These torque values apply to mount assembly fasteners except those noted in the instruction.			

IMPORTANT: Read instructions before assembling. Bolts should be finger tight until instructed to tighten to torque shown in torque chart. Use standard methods and practices when attaching snowplow, including wearing safety glasses during drilling.

AS VIEWED FROM DRIVER-SIDE

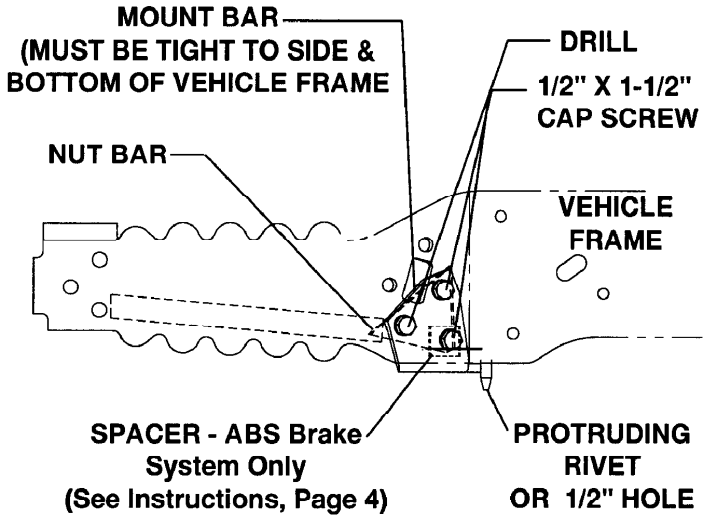

MOUNT BARS - DR & CU

1. Remove the bumper, with brackets attached, from the vehicle frame.
2. Locate mount bars tight to outside and bottom of vehicle frame and against long protruding rivet. (Vehicles without frame rivets: locate mount bars to front edge of 1/2" holes in bottom of vehicle frame rails.) Clamp mount bars in place.

   NOTE: Vehicles with ABS brakes have a bracket on the driver-side. See instructions bottom of page 4.
3. Use each mount bar as a template to drill three 9/16" holes in each side of vehicle frame.
4. Install a nut bar inside each vehicle frame rail, aligning it to drilled holes. Fasten each mount bar to a nut bar with three 1/2" x 1-1/2" cap screws and lock washers. Tighten cap screws to corresponding torque chart value.

AS VIEWED FROM DRIVER-SIDE

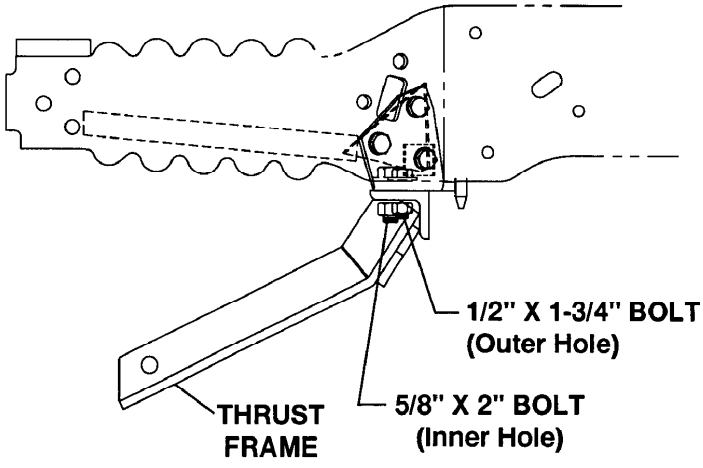

THRUST FRAME

Loosely attach thrust frame to each mount bar with one 1/2" x 1-3/4" bolt, flat washer, and locknut in outer hole; and one 5/8" x 2" bolt, flat washer, and locknut in inner hole. Install flat washers against slots in mount bars.

MOUNT FRAME

1. Vehicles with transmission cooler located in front of the radiator on the curb-side. Install a convoluted tube over each cooler line above the "Y" formed by the cooler lines.

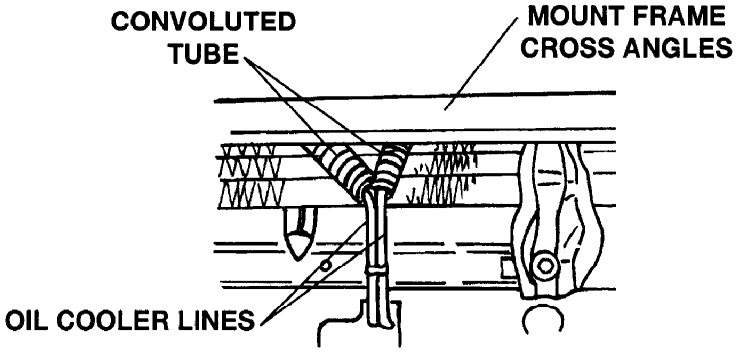

2. Place mount frame onto vehicle frame horns. Align large holes in side plates to large holes (or slots) in vehicle frame.
3. Fasten each side with a 5/8" x 1-3/4" bolt, two flat washers, and locknut. Install flat washers against mount frame and vehicle frame. Install nut to inside of vehicle frame.

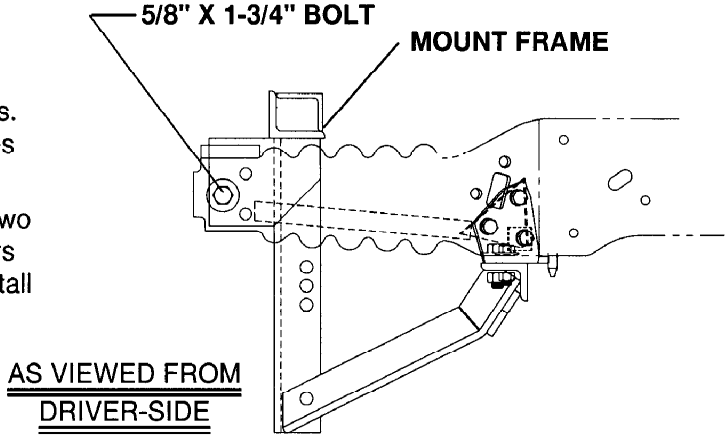

SPREADERS - DR & CU

1. Position a spreader frame, link arm lugs towards center of vehicle, between each mount frame angle and thrust frame angle.

   During installation, allow for drop in vehicle height when weight of plow is added. Final coupling lug hole center to level surface distance should be 9-1/2" to 10-1/2" with plow attached and resting on the level surface. (See Coupling Lug Height Check near end of these instructions.)

2. On each side, insert;

   a 5/8" x 2-1/4" bolt through the thrust frame, spreader frame, and lower hole of mount frame angle;

   a 5/8" x 1-3/4" bolt through highest hole possible in spreader frame and mount frame angle;

   and a 5/8" x 1-3/4" bolt through hole between link arm lugs and front of mount frame angle.

   Loosely retain each bolt with a locknut.

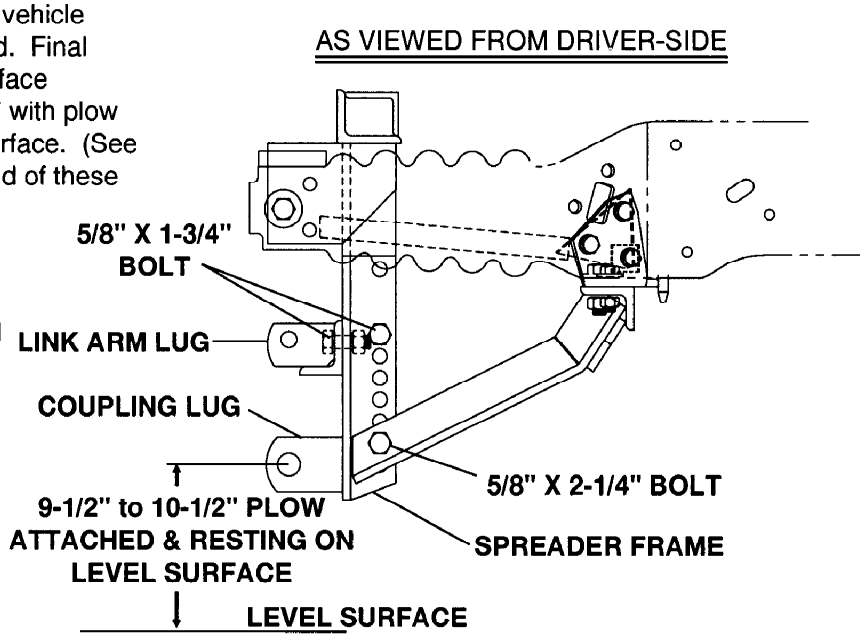

3. Starting with the mount frame to vehicle frame fasteners, **TIGHTEN ALL BOLTS TO CORRESPONDING TORQUE CHART VALUES.**

Continued on next page.

AS VIEWED FROM DRIVER-SIDE

SECURING MOUNT FRAME

1. Use each mount frame side bar as a template to drill two 1/2" holes into the side of each vehicle frame rail.
2. Secure each side with two 1/2" x 1-1/2" bolts, flat washers, and locknuts. Install flat washers against vehicle frame.

LINK ARMS

Fasten a link arm between each upper pair of link arm lugs with a 3/4" x 3-1/4" grade 5 rivet and cotter pin.

BUMPER

1. Reinstall bumper to original position using the existing fasteners.
2. The air deflector may require notching for clearance of link arm lugs, or it may be removed from the vehicle. If deflector is removed, retain deflector and reinstall whenever the snowplow mount is removed from the vehicle.

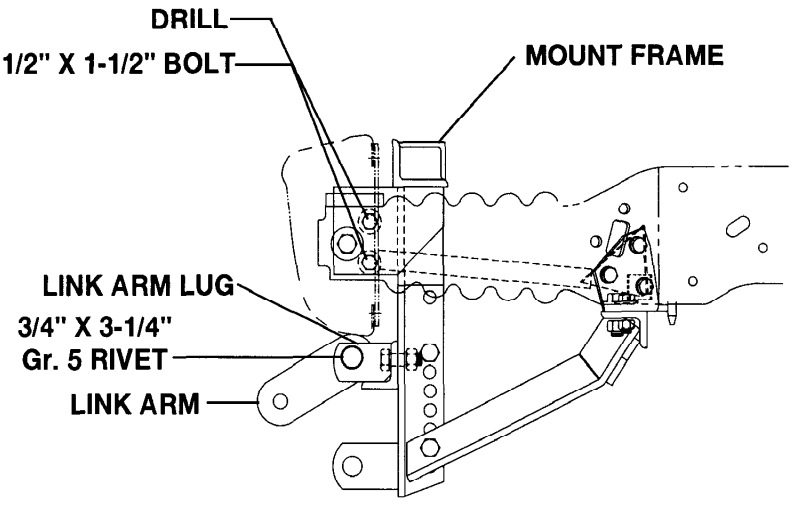

TIGHTEN ALL BOLTS TO CORRESPONDING TORQUE CHART VALUES.

CAUTION: During electrical installation, THE LONG BATTERY GROUND CABLE (no stripe) MUST BE GROUNDED TO THE NEGATIVE BATTERY TERMINAL.

HARNESS KIT SELECTION:

For DUAL replaceable bulb type HB-5 headlamps - Use Box No. 61540 Headlamp Kit 9-Pin and 61590 Harness Kit HB-5 9-Pin -A.

NOTE: After 5 to 10 hours of snowplow usage, retorque all mount assembly fasteners.

VEHICLES WITH ABS BRAKES

NOTE: Vehicles with ABS bracket shown in diagram require the following steps to install mount bar on driver-side:

A. Remove the two cap screws mounting the ABS bracket.

B. Pry ABS bracket away from vehicle frame and remove lower cage nut by pushing nut up into the slot.

C. Replace top bolt.

D. Locate mount bar per Mount Bars, step 2. Use two rear holes of mount bar as a template to drill 9/16" holes in vehicle frame and ABS bracket.

E. Temporarily insert 1/2" x 1-3/4" cap screws into two rear holes to hold mount bar in position while drilling front (third) hole. (Drill may break into lower mounting hole for ABS bracket).

F. Place square spacer between mount bar lower rear hole and vehicle frame to adjust for ABS mounting bracket.

Continue installation, see Mount Bars Step 3, page 2.

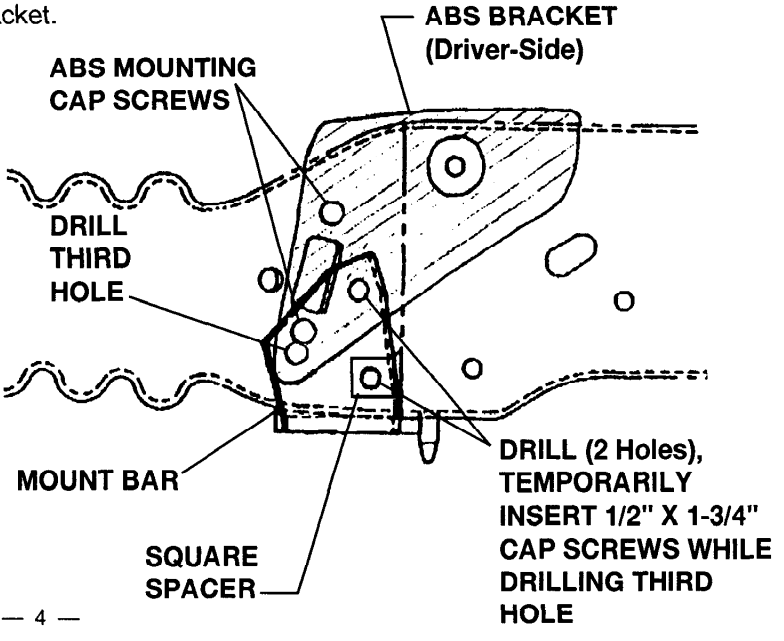

Solenoid Control
INSTALLATION INSTRUCTIONS

1. Align dash bracket hole shown in diagram to end hole of control bracket. NOTE: Top flange of control bracket may be reversed in dash bracket from position shown in diagram. Attach with one #8 x 3/8" hex head thread cutting screw and lock washer on each side.
2. Use top holes in dash bracket (see diagram) as a template to drill a 9/64" hole in each side of control bracket. Secure dash bracket to control bracket with a second screw and lock washer in each side.
3. Secure solenoid control to control bracket with two #8 x 5/8" hex head tapping screws.
4. Move seat forward and 4 wheel drive lever toward seat. Locate control and bracket assembly on floor tunnel so that it does not interfere with the operation of vehicle controls. Mark this location.
5. Remove control bracket from dash bracket.
6. Place dash bracket in marked location. Use dash bracket as a template to drill four 1/8" holes in tunnel. **CAUTION:** Check for clearance before drilling holes. Secure dash bracket to tunnel with four #10 x 1" tapping screws and lock washers.
7. Reassemble control bracket to dash bracket. Bend top flange of control bracket to desired position.
8. Secure harness to control bracket with cable clamp and one #8 x 3/8" hex head thread cutting screw.

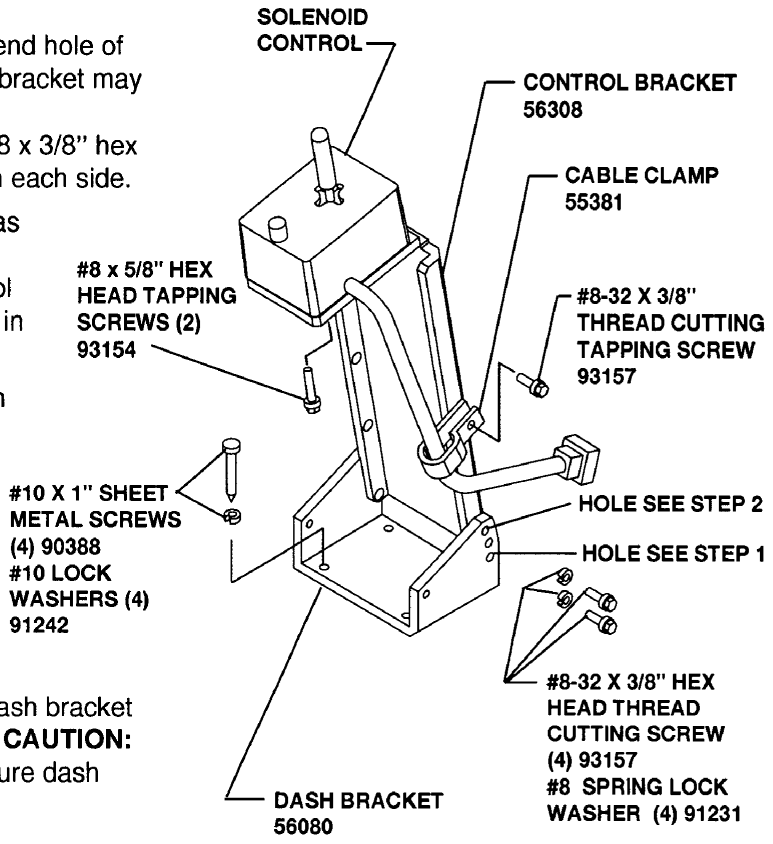

HARNESS, SOLENOID CONTROL & MOTOR RELAY INSTALLATION DIAGRAM

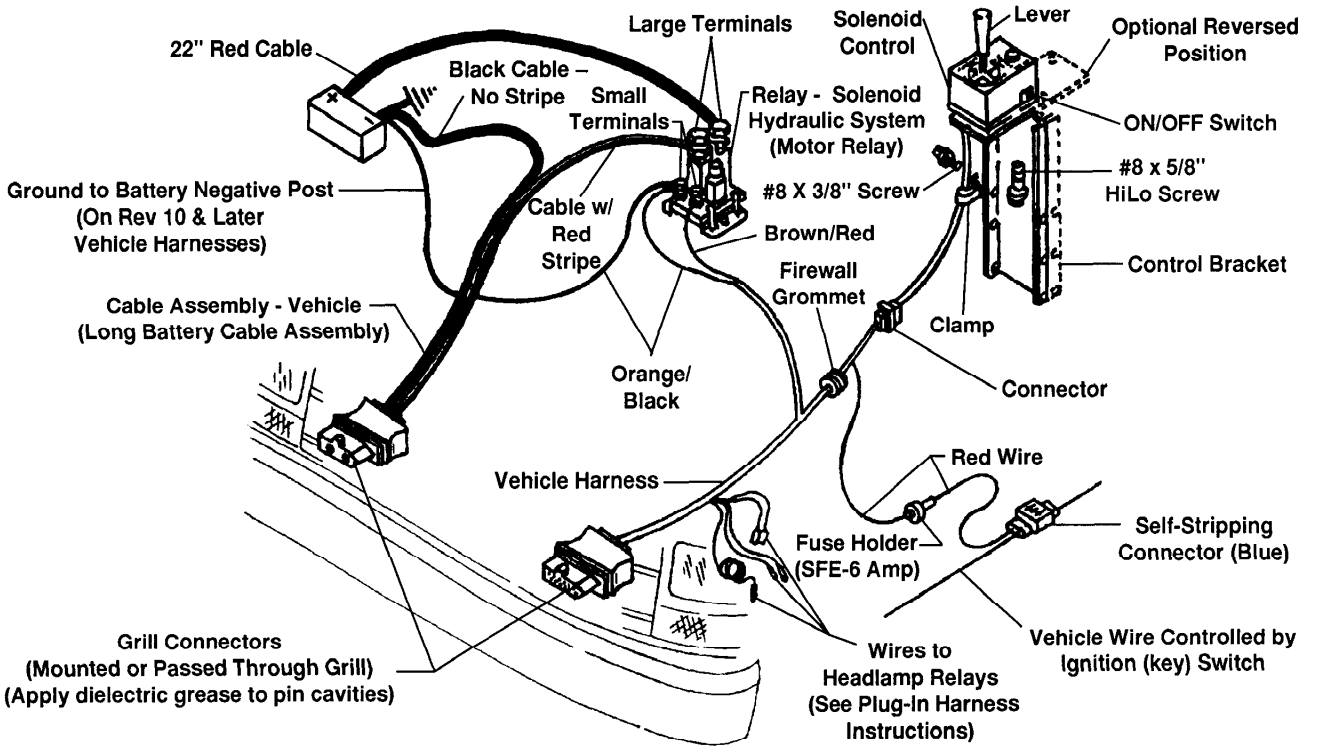

WARNING: The symbol at left identifies a safety warning that indicates a potentially hazardous situation that, if not avoided, could result in death or serious personal injury.

VEHICLE HARNESS AND MOTOR RELAY

Except as noted, parts to be installed are found in the hydraulics box.

CAUTION: To prevent corrosion on all under-hood electrical connections, use dielectric grease to fill receptacles and lightly coat ring terminals and blades before assembling, or lightly coat the connections after assembling.

1. Identify wires for the parking lamp and the turn signals on both sides of the vehicle. Attach a black self-stripping bullet receptacle connector (found in harness kit) to each of these three wires.
2. Remove NEGATIVE battery cable from battery.

WARNING: Electrical shock hazard. Disconnect battery before beginning electrical installation.

3. Find a location for the motor relay where it will be protected from road splash and will be within 18" of the vehicle primary battery.

   NOTE: Motor relay terminals must be up or horizontal.

   Using the motor relay mounting plate as a template, drill two 9/32" holes, and mount motor relay to holes using 1/4" x 3/4" bolts, flat washers, and locknuts.
4. Route 22" red battery cable between a large motor relay terminal and the POSITIVE battery terminal avoiding sharp edges, and hot or moving parts. Attach cable to motor relay terminal with a lock washer and 5/16"-24 jam nut. Attach cable to battery POSITIVE terminal with existing terminal fastener.
5. Stretch rectangular openings of plug cover straps (found in harness kit) over grill connector ends of long battery cable assembly (found in hydraulics box) and vehicle harness (found in harness kit). Place plug covers over molds on harnesses.

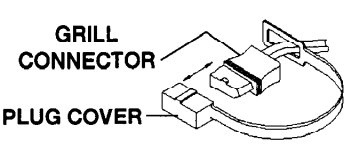

6. Find a location on the vehicle grill on the battery side for mounting the battery cable grill connector. The best location is at least 10-1/2" from the center of the grill and at a convenient height for connecting the plow plugs.

   Allow grill connector of each harness to hang out in front of grill. Allow enough cable so it is easy to mate and remove connector. Secure with long cable ties (found in mount box).

7. Route battery cable through the grill at the selected location and through or around the radiator bulkhead to the motor relay avoiding sharp edges, and hot or moving parts.

8. Attach cable with red stripe to the unused large terminal on the motor relay and secure it with a lock washer and 5/16"-24 jam nut.

9. Route the battery cable without a stripe directly to the NEGATIVE battery terminal (carefully separate the two cables as needed to reach the battery ground). DO NOT attach cable to battery at this time.

10. Find a location in grill on driver side for mounting the vehicle harness (similar position to battery cable mount). See Steps 6 & 7 above for how to mount. Route vehicle harness through grill and around, or through radiator bulkhead (drill 5/8" hole if needed) into engine compartment.

11. Route the wires that break out of the vehicle harness to the area behind the driver-side headlamp. Route rest of harness to the firewall. Drill a 5/8" hole through the firewall in a convenient location away from sharp edges, and hot or moving engine parts.

    IMPORTANT: On all vehicles with DRLs, insert fuse holder on pink wire of DRL Adapter Kit (PN 61584) through firewall first. Route end of pink wire with receptacles to area of driver-side headlamp.

    Feed vehicle harness fuse holder through hole and then feed the plastic connector and harness through to the cab. Disassembling the fuse holder may make it easier to pass through 5/8" hole.

12. Route brown/red and orange/black (early revision harnesses have brown/red and black/orange wires) wire loom to motor relay. Early revision harnesses must be modified if the CabCommand control is being installed. (See instructions furnished with the CabCommand control.)

    Attach the brown/red and orange/black (early revisions black/orange) wires small ring terminals to separate small terminals on motor relay using a lock washer and #10-32 nut for each connection.

13. Route the orange/black wire with 3/8" ring terminal to the battery negative post DO NOT attach wire to battery at this time.

14. Inside the cab, route vehicle harness connector to solenoid or CabCommand control and couple the connectors together.

15. Reconnect vehicle ground cable to the NEGATIVE battery terminal. Attach the hydraulic unit black battery cable and orange/black wire terminal to the negative clamp bolt.

16. Locate an accessory wire capable of carrying 7 amps in addition to existing circuit loads and controlled by the ignition (key) switch. Route the vehicle harness SFE-6* fuse holder red wire to this location and trim off any excess length of wire (keep fuse holder in system). If used, DRL pink wire requires 0.4 amps.

    Open the blue, self-stripping connector and place the end of the red wire against the inner groove stop (end of wire must not extend from the closed connector), and the accessory wire in the outer groove. Close connector over the wires using a pliers and snap the locking tab in place. Repeat with DRL pink wire.

* Early style harnesses have a 10-amp fuse which must be replaced with SFE-6 fuse for CabCommand control.

REMINDER: To prevent corrosion on all underhood electrical connections, use dielectric grease to fill receptacles, including grill connectors, and lightly coat ring terminals and blades before assembly or lightly coat connections after assembling.

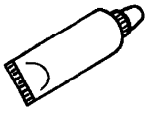

DIELECTRIC GREASE - PN 56099 or PN 49326

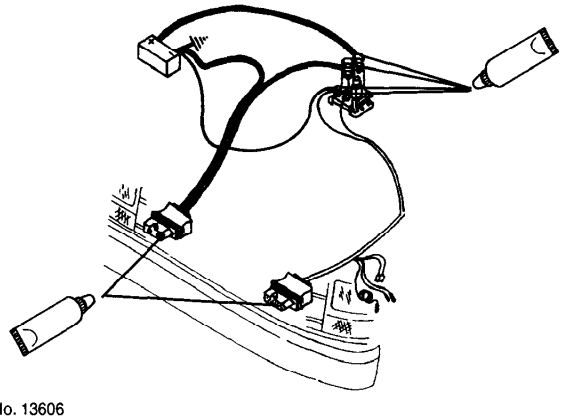

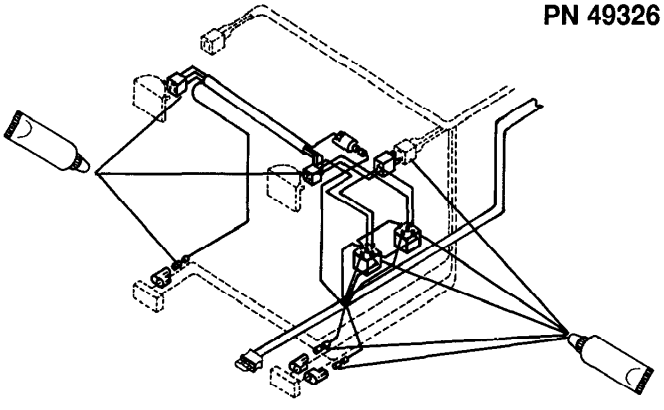

VEHICLE HEADLAMP WIRING DIAGRAM

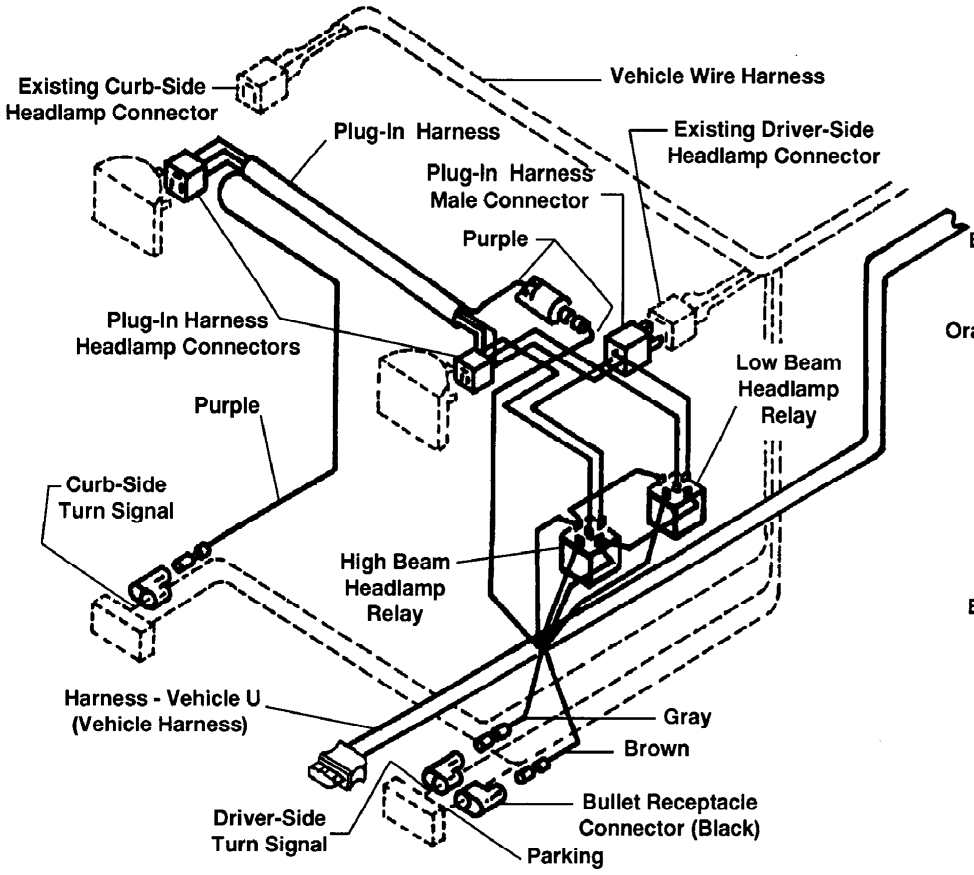

HEADLAMP RELAY WIRING DIAGRAM
Type – A

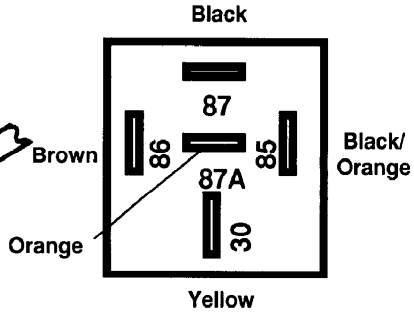

Low Beam Headlamp Relay

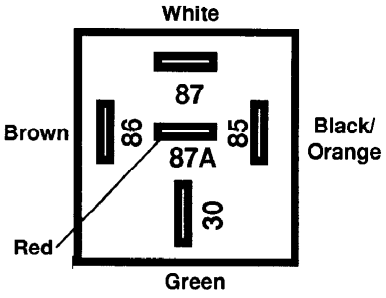

High Beam Headlamp Relay

VEHICLE HEADLAMP PLUG-IN HARNESS & HEADLAMP RELAYS

REMINDER: Lubricate all receptacles and blades with dielectric grease before assembling.

1. In the engine compartment behind the driver-side headlamp, insert wire bullets from vehicle harness into black bullet connectors (installed in step one of previous section) with brown wire to parking lamp wire on driver side, and gray wire to left turn signal wire on driver side.
2. At the vehicle driver-side headlamp, remove the connector from the headlamp and couple matching connector with plug-in harness 3-wire male plug (plug-in harness found in harness kit). Attach plug-in harness headlamp connector to headlamp terminals.
3. Route other end of plug-in harness along radiator bulkhead or over radiator shroud to curb-side headlamp. Remove headlamp connector and secure connector with a cable tie (found in harness kit). Attach plug-in harness headlamp connector to headlamp terminals.
4. On the curb side, insert purple wire bullet from plug-in harness into vehicle turn signal black bullet connector installed in step one of the previous section.
5. At the driver-side headlamp, insert the purple wire bullet from the vehicle harness into the purple wire receptacle on the plug-in harness.
6. At driver-side headlamp, connect vehicle and plug-in harness wires with receptacles to the two headlamp relays (found in harness kit) as shown in the above diagram. (If vehicle has DRLs, replace brown wires with pink wire from DRL kit. Brown wires from vehicle harness are not used in DRL installations.)
7. Place grommet around vehicle harness and insert into firewall hole (also put a grommet in the hole in the radiator bulkhead if one was drilled). Use cable ties (found in harness kit) to secure harnesses, relays and wires away from sharp edges, and hot or moving engine parts and to prevent accidental grounding of connections.
8. Replace vehicle turn signal flasher with flasher furnished in harness kit.
9. Lubricate terminal cavities of both grill connectors with dielectric grease. Give dielectric grease tube to vehicle owner for future lubrication of grill connectors.

Continued on next page.

OPERATIONAL TESTS AND ADJUSTMENTS

Mount plow assembly to vehicle. (See label on back of blade or Owner's Manual for mounting instructions.)

Filling Hydraulic Unit

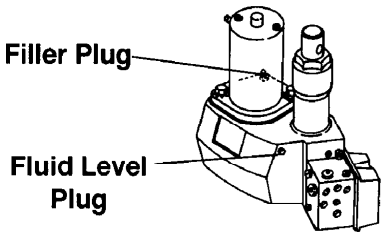

1. Push lift channel all the way down.
2. Remove fill plug and fluid level plug.
3. Fill unit through fill plug hole until fluid runs out of fluid level hole. Replace both plugs.

   Use: automatic transmission fluid (ATF) Dexron III to -10° F (-23° C), or
   WESTERN®High Performance Fluid to -25° F (-32° C), or
   Texaco 1537 Aircraft Hydraulic Oil for temperatures below -25° F (-32° C).
4. Turn ignition (key) switch to the ON or ACCESSORY position.
5. Turn the control ON/OFF switch to the ON position.
6. Move control lever to angle left and angle right several times to remove air from Hydra-Turn®rams. **DO NOT raise blade. This may cause pump cavitation.**
7. Refill unit with fluid following the procedure in Step 3 of this section.
8. Move the control lever as indicated on label to control the plow. Raise and lower plow several times to remove air. Recheck fluid level according to Step 3 of this section.

   Capacity: Solenoid ISARMATIC®Mark IIIa reservoir 1-3/4 quarts
   Equipped with 10" Hydra-Turn rams 2-3/8 quarts

WARNING: To prevent accidental movement of plow, always turn the solenoid control to the OFF position when the mounted plow is not in use.

Blade Drop Speed Adjustment

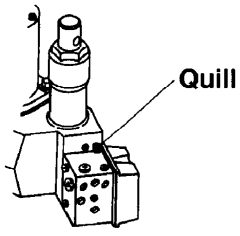

The quill on the top rear of the valve manifold (see diagram) adjusts blade drop speed.

Turn quill IN (clockwise) to decrease drop speed.

Turn quill OUT (counterclockwise) to increase drop speed.

NOTE: Turning quill too far in can slow raise time.

Coupling Lug Height Check

1. Mount plow to vehicle (see label on back of blade or Owner's Manual for mounting instructions). Add recommended ballast as found in selection list.
2. Lift plow and move vehicle a minimum of 10 feet. Lower blade.
3. After step 2, with blade on level surface, slack in lift chain, and rear ballast located behind rear wheels, the center of coupling lug holes (hitch pin shaft) to level surface should measure 9-1/2" to 10-1/2". To obtain height, adjust spreader position.

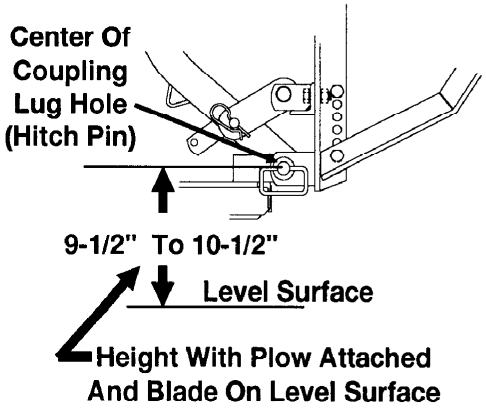

NOTE: Coupling height must be 9-1/2" minimum to allow stand to be pinned to lift frame.

4. Adjust chain slack with plow mounted to vehicle and lift channel pushed all the way down. To adjust, remove chain from hook. Straighten chain and pull tight. Rehook it to lift channel. After it is hooked, it will have the correct amount of slack for blade "float." DO NOT remove chain from lift channel when removing plow from vehicle.

Continue on to next page.

Final Hydraulic Inspection

1. Make sure all fasteners and hydraulic and electrical connections are tight.
2. Check ram packing nuts for oil leakage. If any leakage is observed, tighten the packing nut 1/4 turn after you feel the nut contact the packing. Do not overtighten — overtightening affects cylinder operation and shortens the life of the packing. A short period of normal operation will allow chevron packings to become saturated, and leakage will normally stop.

Vehicle Lighting Check

1. Check the operation of vehicle and plow lights with plow mounted to vehicle and both plow plugs connected.

   Turn signals and parking lamps

Parking lamps ON	Both vehicle and plow parking lamps should be on at the same time.
Right Turn Signal ON	Both vehicle and plow right turn signal lamps should flash at the same time.
Left Turn Signal ON	Both vehicle and plow left turn signal lamps should flash at the same time.

   Headlamps

   Move vehicle headlamp switch to the ON position. Connecting and disconnecting the 9-pin plow plug from the grill connector should switch between vehicle and plow headlamps as follows:

9-pin plow plug DISCONNECTED	Vehicle headlamps should be on, plow headlamps off.
9-pin plow plug CONNECTED	Plow headlamps should be on, vehicle headlamps off.

   Dimmer switch should dim whichever headlamps are operating. The high beam indicator on the dash should light when either set of headlamps is on high beam.

   Solenoid or CabCommand Control

   9-pin vehicle harness revision 10 and later or

   9-pin vehicle harnesses–earlier revisions modified for CabCommand control:

   The control indicator light should light whenever the control ON/OFF switch and the ignition (key) switches are both in the ON position. The plow plugs do not need to be connected to the grill connectors.

   Solenoid Control used with earlier revision harnesses

   9-pin revision 7, 8, or 9 vehicle harnesses:

   The control indicator light should light whenever the control ON/OFF switch and the ignition (key) switches are both turned ON and the plow plugs are connected to the grill connectors.

   9-pin vehicle harnesses–all earlier revisions:

   The indicator light will also light when the control and ignition (key) switches are on the plow plugs are disconnected. If the parking lights are turned on (with plow plugs disconnected), the indicator light will go out.
2. Connect plow plug to grill connector. Raise plow and aim plow headlamps according to SAE J599 Lighting Inspection Code (See Service Bulletin SP 608) and any applicable federal, state, or local regulations.
3. Check aim of vehicle headlamps with plow removed.
4. When plow is removed from the vehicle, install plug covers on grill connectors and insert the plow plugs into the boot on the hydraulic unit.

NOTE: After 5 to 10 hours of snowplow usage, retorque all mount assembly fasteners.

Solenoid Control — 9-Pin Vehicle Harness Revision 10 & later - The control indicator light will light whenever the control ON/OFF switch and the ignition (key) switch are both turned ON. The plow plugs and grill connectors do not need to be connected for the control light to be on.

UniMount SYSTEM

Wiring Diagram Harness Type – A w/ 9 Pin Headlamp Kit

& SAE Headlamp Types 2B/2D HB-1 HB-5

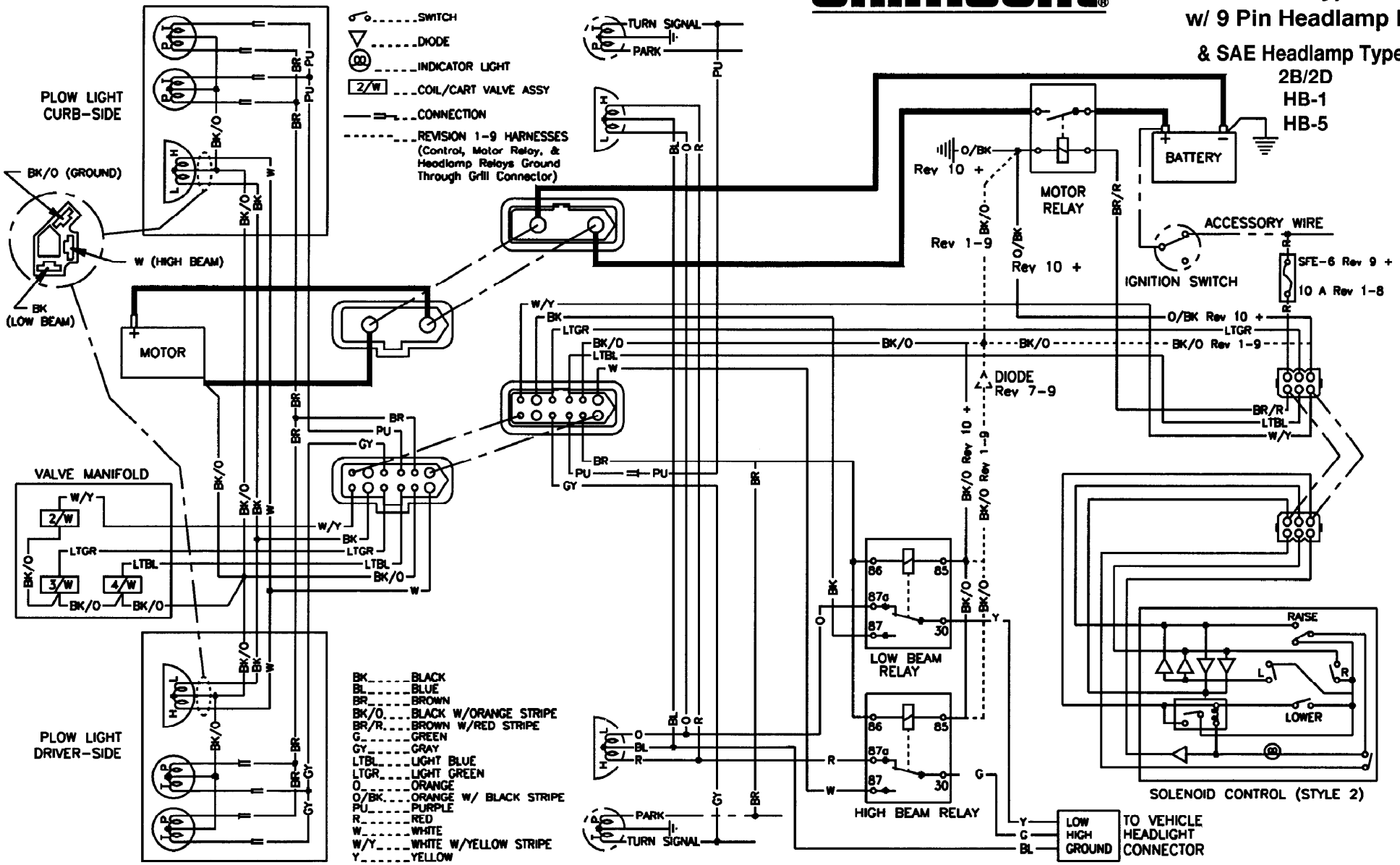

Vehicle harnesses – 9 pin, P.N. 61437 rev. 7 or 12 pin, P.N. 61557, rev. 5 and later – The indicator light on the solenoid control will only light when the plow is attached to the vehicle and the ignition switch and control on/off switch are both turned on.

Vehicle harnesses with revision numbers prior to listed revisions at right – The indicator light will also be on when the control and ignition (key) switches are ON and the plow plugs are disconnected. If the parking lights are turned on (with plow plugs disconnected), the indicator light will go out.

Mount Assembly Box No. 61800
Harness Kit Box No. 61590
Hydraulics Box No. 56365
PARTS DIAGRAM & LIST

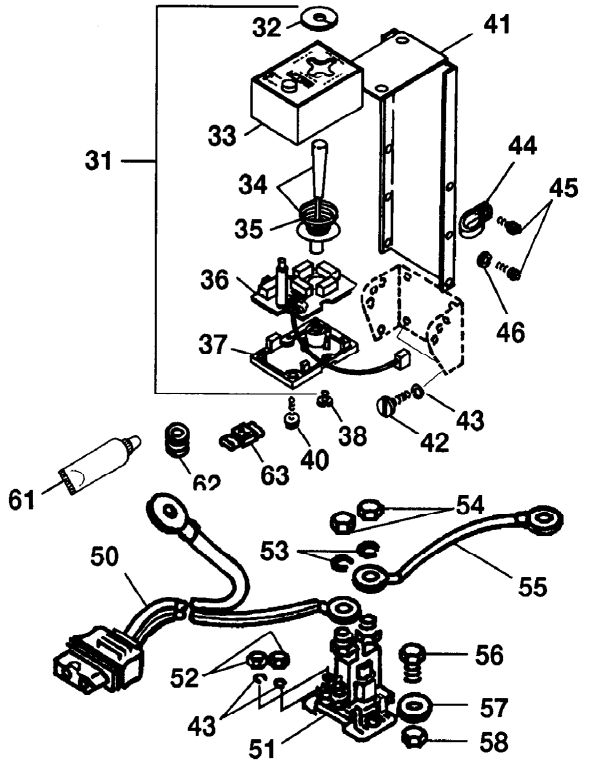

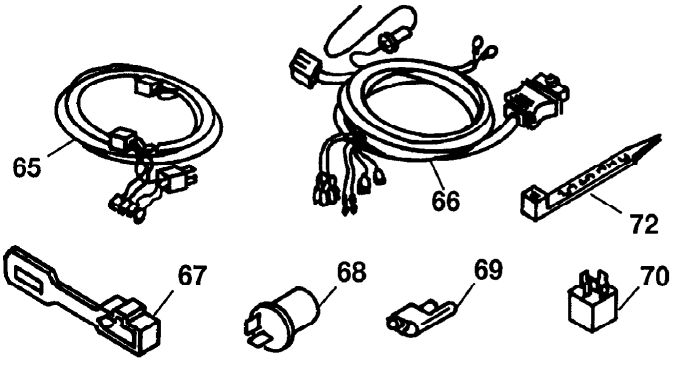

ITEM	PART NO.	QTY.	DESCRIPTION
Found in Hydraulics Box No. 56365			
31	56369	1	SOLENOID CONTROL (Style 2)
32	. 56283	1	SHIELD
33	. 49286	1	BODY W/LABEL & LENS (Style 2)
34	. 49287	1	LEVER, SPRING & ACTUATOR KIT (Style 2)
35	. 55923	1	SPRING - CONICAL
36	. 49283	1	PC BOARD ASSY MOLEX (Style 2)
37	. 56199	1	BASE
38	. 93153	2	#6-19X3/8 SL HXW TFTS HILO
40	93154	2	#8-18X5/8 SL HXW TFTS HILO
41	56308	1	CONTROL BRACKET
42	90388	4	#10X1 SL PN TFTS TY AB BZP
43	91242	4	#10 SP LK WASHER BPO
44	55381	1	CABLE CLAMP
45	93157	5	#8-32X3/8 SL HXW TCTS TY T BP
46	91231	4	#8 SP LK WASHER BP
50	61169	1	CABLE ASSEMBLY - VEHICLE
51	56134K	1	RELAY-SOLENOID HYDRAULIC SYS
43	. 91242	2	#10 SP LK WASHER BPO
52	. 91402	2	#10-32 HX NUT ZP
53	. 91202	2	5/16 SP LK WASHER ZP
54	. 92842	2	5/16-24 HX JAM NUT
55	22511	1	BATTERY CABLE 22" RED
56	90002	2	1/4-20X3/4 HX CS G2 ZP
57	91101	2	1/4 PLAIN WASHER TY A STD ZP
58	91331	2	1/4-20 PT HX LK NUT NYIS ZP
61	56099	1	DIELECTRIC GREASE TUBE (0.25 ounce)
	49326	1	WESTERN DIELECTRIC GREASE TUBE (2 ounce)
62	66130	2	RUBBER GROMMET
63	59114	1	SELF STRIP WIRE CONNECTOR
Parts listed above may be found in one of these assemblies.			
	56368	1	CARTON ASSY LOOSE PARTS U
	. 56367	1	BOLT BAG ASSY LARGE U
	. . 56358	1	BOLT BAG SMALL U

ITEM	PART NO.	QTY.	DESCRIPTION
Found in Harness Kit Box No. 61590			
65	61591	1	PLUG-IN HARNESS HB-5 -A (For Harness Kit No. 61590)
66	61437	1	VEHICLE HARNESS 9-PIN U
67	61548	2	PLUG COVER
68	60109	1	FLASHER HD
69	59224	3	BULLET RECEPTACLE CONNECTOR
70	61535	2	RELAY SPDT
72	59223	8	CABLE TIE
Parts listed above may be found in the following assembly.			
	61547	1	PARTS BAG

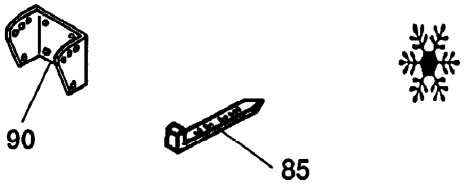

Found in Mount Box No. 61800			
85	61536	4	CABLE TIE - LONG
90	56080	1	DASH BRACKET
Parts listed above may be found in the following assembly.			
	61858	1	BOLT BAG ASSY (61800)

Abbreviations

ASSY	Assembly	SL	Slotted
BP	Black Phosphate	SP	Spring
BPO	Black Phosphate & Oil	SPDT	Single Pole Double Throw
BZP	Black Zinc Plate	STD	Standard
CS	Cap Screw	SYS	System
G	Grade	TCTS	Thread Cutting Tapping Screw
HD	Heavy Duty		
HX	Hex	TFTS	Thread Forming Tapping Screw
HXW	Hex Washer		
LK	Lock	TY	Type
NYIS	Nylon Insert	U	UniMount@System
PC	Printed Circuit	W/	With
PN	Pan	ZP	Zinc Plate
PT	Prevailing Torque		

Indented part numbers are included in the assembly under which they are listed. Quantities shown are included with the assembly.